ØRIC USER MONTHLY

with Alternative Micros

No. 108/109

August/September 1996

Keeping the Oric alive

Part Two #D000-#DFFF now available...

Edited and Distributed by Dave Dick, 65 Barnard Crescent, Aylesbury, Bucks HP21 9PW

EDITORIAL

HELLO AND WELCOME BACK,

To the world of the ORIC.

A couple of weeks in Cornwall have re-charged my batteries, and left me with a huge backlog of Oric related items to wade through. Now that Summer is fading I will concentrate on sifting through the orders and letters. Summer seems to be so short, especially as two weeks in Spain is not on the itinerary this September. Nerja and Alicante in'94 and '95 really rounded off the season. Perhaps next year I'll go for Paris in the Spring, and Spain in the Fall.

Cornwall was pleasant enough - cycling,running,squash, and sightseeing. The weather wasn't brilliant, but the food and ale were good. On our last evening we drove to Polperro to a restaurant, where Orician Mark Oxley was the Chef. A really great meal, and some good conversation with Mark and his father when the place closed. They promised to sort out some adventures for the Oric - haven't forgot have you lads?

This issue promises to be one, if not the biggest that has been produced. Thanks for all your input, and keep on tapping!

THE INDEX

page 1 - another cover from Jon Haworth..... page 2 - EDITORIAL and INDEX.
Page 3 - NEWS..... page 4 - OUM GRAND RAFFLE..... pages 5/6 - READERS LETTERS.
Page 7 - BITS'n'BOBS.....page 8 - BUILDING A PC with Paul Hill.
Page 9 - WELL!! - IT SHOULD BE: THE 8-BIT 'A to Z' - in part 16, Steve Marshall wades his way through the Spectrum range, BUT I APPEAR TO OF LOST THE ARTICLE - IF I FIND IT IN TIME,THEN SO BE IT; IF NOT THEN APOLOGIES AND I'LL QUICKLY PUT SOMETHING ELSE TOGETHER..... pages 10/11 - ALTERNATE MICROS..... page 12 - MORE BITS 'n' BOBS
pages 13/ 14 - MORE READERS LETTERS.....pages 15/16 - ULTIMATE HI-SCORE TABLE
pages 17 to 19 - MACHINE CODE FOR THE ORIC ATMOS (part 56) - Peter Bragg.
Page 20 - THE ORIC MEET '96 - the juicy bits!
Pages 21 to 35 - THE ORIC 1/ ATMOS UNOFFICIAL ULA GUIDE from Mike Brown.
pages 36/37 - BRIAN's PAGE becomes pages as the Welsh Wizard sets more posers.
Pages 38/39 - SON OF PET: CBM C64 & 128 - a tour of the machines from Ron Key.
page 40 - MESSAGES and COMMENTS
pages 41 to 44 - RAMBLING IN THE ROM (Pt.82) - with Jon Haworth
page 45 - THE BACK PAGE

WOWIE ZOWIE

HEY THERE POP PICKERS! IF YOU ARE A DAVID BOWIE FAN, THEN THERE IS ONLY ONE WAY TO GET A COPY OF HIS LATEST SONG - DOWNLOAD IT FROM THE INTERNET. THAT'S PROGRESS FOR YOU!

COMPUTER MUSEUM

OUM READER HAKAN KARLSSON FROM SWEDEN IS SETTING UP A COMPUTER MUSEUM. IF YOU HAVE ANY OLD COMPUTERS THAT YOU WOULD LIKE TO DONATE, THEN PLEASE CONTACT HIM AT: LILLEGARDEN SKARSTAD, S-534 95 VARA, SWEDEN

NEWS.....NEWS.....NEWS

KRYSTAL WORLDS II

LATEST NEWS FROM ROBERT COOK ON HIS FOLLOW UP TO 'KRYSTAL WORLDS' , IS THAT IT'S JUST ABOUT FINISHED, EXCEPT FOR SOME SOUNDTRACK. A FULL REVIEW COMING SOON.

A NEW ARCADE GAME

NEXT TASK FOR ROBERT COOK IS A 100% MACHINE CODE ARCADE GAME. NO CLUES AS YET TO WHAT IT IS ABOUT, BUT IT WILL BE GREAT TO TRY A NEW ARCADE.

THE EDITOR'S ORIC SYSTEM

THANKS TO STEVE HOPPS, WHO HAS TRACED THE FAULT ON MY ORIC SYSTEM. IT WAS A RIBBON CABLE - THAT WILL TEACH ME TO STOP PLAYING ABOUT WITH DIFFERENT DRIVE SET UPS. STEVE IS ADAPTING MY TWIN OPELCO DRIVE SYSTEM SO THAT IT WILL HOUSE A 3" AND 3.5" DRIVE. BY THE TIME YOU READ THIS I HOPE TO BE ORICING AGAIN. MEANWHILE I HAVE BEEN BUSY TRANSFERRING MY 3.5" DISC SOFTWARE TO THE PC, AND HAVE HAD GREAT FUN AGAIN WITH SOME OF THOSE OLD CLASSIC ARCADE GAMES.

ORIC/ BETAMAX/ ESCOM

WHAT, YOU MAY ASK, IS HE ON ABOUT?

I BOUGHT AN ORIC ATMOS - THE BEST AT THE TIME IN THE 8-BIT RANGE, AND ALONG CAME THE RECEIVER.

I BOUGHT A BETAMAX VIDEO RECORDER - THE BEST FOR QUALITY, BUT LIKE THE ORIC - WASN'T MARKETED CORRECTLY, AND EVERYONE WENT TO VHS.

I RECENTLY BOUGHT A PC FROM ESCOM. YEP - YOU GUESSED IT - THEY ARE IN RECEIVERSHIP. I HAD A NICE LETTER FROM ICL SORBUS WHO HANDLED THE SUPPORT FOR ESCOM. THEY EXPLAINED THAT I WAS NO LONGER ENTITLED TO FREE TELEPHONE SUPPORT, DUE TO THE MANNER IN WHICH THEY HAD CONDUCTED BUSINESS. ESCOM DID NOT PAY IN ADVANCE TO ICL FOR MY SUPPORT. INSTEAD THEY WERE INVOICED MONTHLY BY ICL FOR THE SUPPORT. ICL STATED THAT AT THEIR EXPENSE (NOW HERE COMES THE PUNCH LINE), THAT THEY HAD SET UP A HOT LINE FOR ESCOM CUSTOMERS. THE CHARGE FOR CALLING WOULD BE £1.50 A MINUTE!

ORIC PRICES TO EUROPE

IN THE LAST ISSUE OF O.U.M WE PUBLISHED THE PRICES FOR ATMOS AND DISC INTERFACES IN THE U.K.

STEVE HOPPS HAS NOW COME UP WITH PRICES, WHICH INCLUDE POSTAGE AND COMPENSATION TO EUROPE.

A) ATMOS ONLY (EXCLUDES MANUAL, P.S.U AND CASSETTES) - £50

B) DISK INTERFACE WITH LEAD TO ATMOS - £65

FOR FURTHER DETAILS OR TO ORDER, CONTACT STEVE HOPPS, 56 MANOR PARK DRIVE, FINCHAMPSTEAD, WOKINGHAM. RG11 4XE. ENGLAND. HIS HOME TELEPHONE NUMBER IS: 01734 328251

O.U.M grand raffle drawn on Sat. July 20th at the ORIG MEET.

As per usual, the GRAND RAFFLE at the ORIC MEET was a long drawn out affair. When there is a monitor as one of the prizes, so there is a rush to avoid it. Of course there are the usual shouts of "Put it back", if someone is lucky enough to win more than one prize. The prizes donated all arrived rather in a rush at the MEET, and so in the end I was not 100% certain of who donated what. Alan Bowers popped into Aylesbury prior to the MEET. He was on his way home to the Isle of Wight after a spell of work in Glasgow. He kindly donated a computer (the ATARI 65XE - I think!).

There was no prize that was particularly a first prize - a case of grab what you want (or if you weren't there, then we grabbed it for you).

£74 worth of tickets were sold on the day. Add this to the £36 that had been sent by post, and we have a grand total of £110 to the OUM funds. THANK YOU ALL.

Let's see who won what:————

TICKET NO.	PRIZE	WINNER
588	A BOOK	JEAN BOILEAU
553	BAR CODE GAME	SUE CRISP
531	BOTTLE WINE	BOB TERRY
582	ATARI 65XE	D. SMITH
513	5.25" DRIVE	CHRIS EVANS
547	6 MONTHS SUBS TO CEO	RON EVANS
619	AMIGA GAMES	DAVE DICK
583	DRUM MACHINE	MATTHEW COATES
563	COMMODORE C64	PETER THORNBURN
600	ELECTRONIC SCALES	ANN DICK
507	6 MONTHS SUBS OUM	JOHN PEACH
559	A MONITOR	SUE CRISP
613	ORIC ASSEMBLER	JON HAWORTH
555	MAGAZINES	SUE CRISP
608	SEGA HANDSET	ROBERT COOK
511	30 HOUR BASIC BOOK	JOHN PEACH
591	A BOOK	JIM GROOM
572	5.25" DRIVE	D.SMITH
590	SCREEN FILTER	JEAN BOILEAU
565	SERIAL PRINTER	PETER THORNBURN
549	VARIETY BOX	RON EVANS
537	GOLF BALL WARMER	STEVE MARSHALL
566	HITS OF 60s CASSETTE	PAUL HILL
545	NOT A LOT!!!	ARTHUR CRAWFORD

READERS LETTERS

DEAR DAVE,

As you were inviting comments in July's OUM, here goes: I think that we ORIC DOS users would prefer a little less emphasis on SEDORIC . I am sure that I am not the only one who has no intention of changing a system which does all I want. Anyway I am getting a bit long in the tooth to keep learning!

Sorry about your geography - Saudi Arabia is hardly Far East.

Lastly, I hope that some time during your stay in Torquay (Cornwall?) You will find time to call in for a coffee. I've been to your place two or three times.

Keep 'em rollin',

STAN HOLDEN (Teignmouth)

DEAR STAN,

I'm afraid we can only publish what we get on a particular DOS. Checking through my contact list, and from feedback via letters, I can only spot the following Disc users who are not SEDORIC orientated:

Colin Bradford (Cumana Dos), and Stephen Meachen (Cumana Super 2 DOS).

There are a few others who use ORICDOS or SUPERDOS etc. for various programs, but basically ORICDOS is hardly used. However, I will look through my vast hoard of info. that I have and publish the occasional ORICDOS item.

Saudi is far enough east for me!!

Sorry I didn't make it for coffee. After a lot of driving in Cornwall, I decided to park the car up for 48 hours when I got to Torquay. We did plan to take an evening cruise, which included a 90 minute run ashore at Teignmouth. Due to the tides, this particular cruise was unable to land for a couple of nights. We ended up at delightful BRIXHAM! Did I say delightful!!!! I'll catch you next time - bet Teignmouth isn't as rough!

DAVE

DEAR DAVE,

Sorry I couldn't make the MEET, but we are moving house.

There isn't any real Oric news I'm afraid. Not much time for the Oric recently, due to the move etc. There is pressure to get rid of the Oric stuff especially now we have the Emulator. However, I am resisting this fairly successfully for the moment - but I'm not sure for how much longer! I'm trying to encourage my daughter to take an interest now my sons have lost all interest in it.

I have made virtually no progress with the Oric MIDI interface. Jonathan Bristow hurriedly wrote some software to drive the interface before he disappeared (is he back yet?).

Unfortunately it does not work and I have not had time to debug it, although I suspect it will be something simple. The software should allow SONIX tunes to be played on a MIDI device through the MIDI port. I'll let OUM know if I make any progress, but don't hold your breath!

JB also sent me a disc from France - mentioned in a previous OUM newsletter. I have had a quick look at it - it seems to contain several versions of the same software and some data files (tunes) - all with quite different names. When run they present a menu which does seem to be MIDI-related. However, none of the selections does anything at the moment. I'll have to get inside this software and see if I can alter the addresses it uses to match my MIDI interface. It was apparently written by a French Oric user who built his own MIDI port and wrote this software to drive it. Again, I'll let you know if I make any progress.

- TREVOR SHAW (Warrington)

LETTERS (Contd.)

DEAR TREVOR,

Thanks for the letter and for sending best wishes to all and sundry.

Have published your new address elsewhere. The Emulator might be great, but nothing beats the Oric keyboard for game playing.

We look forward to more news on the MIDI once you have settled in.

- DAVE

DEAR DAVE,

I was sad to read that Henry Marke was leaving us. In some ways I agree with him - that the games players are being left behind. I myself am more of a gamester than a 'teccy', and until recently hadn't heard of UNIX, LINUX or all the Internet jargon that has been banded about recently. I think Frances is great and has obviously done a marvellous job with the emulator, but most of his articles are gibberish to me. I just don't know what half the things are that he refers to , and so I don't stand a chance. How about introducing some sort of glossary so that us non-PC users stand some chance of understanding what the rest of you are rabbiting on about.

All said and done I do enjoy OUM and try and make my own articles of interest. Unfortunately I am no programming expert and so cannot write articles on the sort of subjects that I really want to. I mentioned some time ago my next set of articles which will be more Oric related, and should get more using their Orics. This is where OUM could possibly do more. I think there should be stuff to do on the Oric, or something to make you go and switch the thing on. If we cannot spark a bit of interest then the old machines will stay turned off.

We need software to keep the interests of non-programmers alive, so we need to encourage the programmers. Whatever the case, if people like Henry don't let us know what they want before giving up on us, then we don't stand a chance. I put out a plea for an article on the use of colour, and Colin Cook responded with some excellent articles. If no-one is going to send in articles or hi-scores or pleas for hints/tips or enter competitions etc., then we may as well not bother.

I'm going to keep sending my little contributions in, hoping that they amuse or educate some of 'the punters'. Sometimes I make controversial comments, sometimes my stuff is full of errors and omissions, but I seem to get a few people writing in, showing a bit of interest. That in turn keeps me going!

Sorry for not being at the MEET again. I do miss being there, but it is such a long haul from up here in Scotland, and costs us a fortune in petrol alone.

That's about enough of my whingeing about other peoples whingeing. I hope everyone is fit and well, and that the MEET is a success.

- STEVE 'MUSO' MARSHALL (Edinburgh).

DEAR STEVE,

It is always good to hear from you, whether it be in the form of an article or a letter which stirs things up!

I agree entirely with your comments. A lot of the technical jargon is 'above my head', but I know that it is of great interest to others. I will certainly sort out some form of glossary to help non-PC users. I'll also dig deep back into old issues of English and French Oric magazines to come up with articles less technical for the gamesters. I'll also try and sort out some projects for Oricians to get involved in - input from readers would be greatly appreciated. I do not want to stop people sending in technical items as these often pave the way forward. It is about getting the right 'mix'. From letters I receive, I get a lot more compliments than grumbles, so perhaps we are getting there. Also worth remembering is the fact that the 'mix' of readers has changed over the years. Gamesters have turned into 'techies', and others have drifted away to be replaced by readers with differing interests.

I look forward to your next set of articles, and in closing would like to say how much I and others appreciate your input.

- DAVE

BITS 'n' BOBS

ON THE MOVE

Trevor Shaw has now re-settled at: 109 CARMARTHEN CLOSE, CALLANDS, WARRINGTON,CHESHIRE. WA5 5UT

MODEM

Trevor Shaw offered a fully working Prism 1200/75 modem (not Oric) for the MEET raffle. Nobody seemed enthusiastic. If you are, then please contact Trevor at the above address.

MESSAGE to TREVOR SHAW from DAVE

I will check out my stocks and see if I have a spare part for your Oric plotter.

HI-SCORE

An addition to the published HI-SCORE table is from Henry Marke - 186,540 on SLIME.

Surprise!

One copy of this issue is different from the rest - if you have the page 36 that states: "congratulations reader", then you are a winner!

BULL ELECTRICAL

Issue 962 of the BULL ELECTRICAL NEWSLETTER has dropped on to the doormat - I must tell the wife to stop laying in the hallway!

Not too much for computer buffs - PC power supplies @ £5.99, 3.5" (1.44) floppy disc drives fitted in a standard 5.25" drive holder c/w adaptor card for just £9, brand new Microsoft ballpoint trackball/mouse at £11.99, Amstrad 3" discs for £15 per box of ten, and finally especially for Peter T, Jon H and Robert C - the MOONSHINE BIBLE - originally published between "The Free Alcohol Act" and "Prohibition" the book is a comprehensive guide to the manufacture of alcohol from potatoes, corn, barley, rice, turnips, beet root, sweetcorn, grapes etc. It includes diagrams and drawings of stills ranging from a small simple home made still, up to stills suitable for large scale alcohol production. Detailed info on producing 2 gallons of spirit from a sack of potatoes! This 270 page tome for £12. You are asked to note that the production of Alcohol in the UK requires a licence - well I've got a marriage licence, and that's enough to drive anyone to drink!

All the above prices exclude V.A.T and postage at £3 per order. BULL can be reached on 01273 203500. They are now on the NET, and you can register for the newsletter, and have it e-mailed to you, and of course you can then place orders.

WEB Site is - http://www.pavilion.co.uk/bull-electrical

E-Mail is - bull@pavilion.co.uk

MASTERPAINT

MANY MOONS AGO I POSSESSED A COPY OF THE INSTRUCTIONS FOR 'MASTERPAINT', A SUPER GRAPHICS PACKAGE FROM 'ERE INFORMATIQUE' (THE FRENCH SOFTWARE HOUSE). THEY APPEAR TO HAVE GONE MISSING. I MAY WELL OF LENT THEM TO SOMEBODY. IF IT WAS YOU - PLEASE RETURN THEM. ALTERNATELY, IF YOU POSSESS A COPY, THEN PERHAPS YOU COULD SEND ME A COPY. IT WOULD BE MUCH APPRECIATED, AS I'VE PROMISED TO PASS THEM ON TO SOMEONE ELSE IN THE SAME PREDICAMENT.

BUILDING A PC - Paul Hill

Here is my story so far on building my own PC computer.

About a year ago a friend of mine (whose company are always updating their computer hardware) offered me a Toshiba T200 laptop 386, with a VGA 14" colour monitor and Epson FX850 printer for just £200. As I didn't have a PC at that time, I accepted his offer and set about learning MS-DOS and WINDOWS 3.1. I also bought a copy of EUPHORIC from Jon Haworth, and although it only ran at half speed I was still very impressed with its' performance. However, after a while, I did start to want more from my PC, i.e. good sound ,more memory, faster processor, CD-ROM etc. And as my work had drifted from electronic testing and trouble shooting to electronic build, I decided to make up my own PC to keep my 'hand in' so to speak. The main criterion of the system was cost and expandability. My dad had a part to play in this as he gave me a 40MB IDE hard drive, 386 PCB and sound card. However, when I mentioned to friends at work, my project, other items became available, and below is a list of the parts which I bought in their right order:

ITEM	DESCRIPTION	SUPPLIER	COST
1	Desk top box c/w 200w power supply.	Computer Fair	£17
2	PCB c/w 386 CPU	Dad	Free
3	Sound board (no IDE)	Dad	Free
4	40MB IDE Hard drive	Dad	Free
5	Keyboard + 486 PCB (Dad's returned)	Dad	£42
6	Sound card - Sirrus logic 5429	Computer Fair	£50
7	I/O card + disk controller card	Friend	£22
8	Mouse	Friend	Free
9	3.5" Disk drive	Computer Fair	£2
10	5.25" Disk drive	Computer Fair	£7
11	4MB - 30 pin SIMM RAM	Dad's friend	£48
12	Ribbon cables	Made myself	Free
	As already mentioned, I have a VGA monitor		
		TOTAL COST	£188

Possible upgrades:

More memory (32MB total), CD-ROM drive, Faster processor, Bigger hard drive (1GB), Active speakers and Joystick.

Since getting the initial hardware working (first time), I have now upgraded with nearly all of the above. i.e:

I am now running with:

A) 8MB RAM - 4MB of which came from my ATARI STE
B) Quad speed CD-ROM - £35 from 'ECLIPSE'
C) 486 dx266 processor + fan - £30 from a computer fair
D) EXCEL 16 Sound card with IDE - £26 from 'ECLIPSE'
E) Joystick - free (a birthday present)

Total cost of upgrade was £91

Hardware now spare is: a sound card, 5.25" disk drive, and 486 SX25 CPU.

I am glad that I started this project and would encourage anyone else with a little electronic knowledge to build their own system. It's very satisfying, and as I'm familiar with the insides of my PC, I'm not afraid to delve inside and upgrade even more in the future.

ALTERNATIVE MICROS

ATARI

Responding to Richard Farrells quest for ATARI 8-bit software in the July OUM is Chris Hearn. 'PAGE SIX ATARI USER' magazine have lots of cheap commercial cassettes, ROM cartridges and PD software on 5.25" disk (standard 8bit Atari format.
Write to: PAGE 6, P.O Box 54, Stafford. ST16 1DR. (TEL: 01785 241153)
Also worth a try are: MICRO DISCOUNT, 265 Chester Rd., Streetly, W.Mids. B74 3EA (TEL: 0121 353 5730)

One that I have spotted recently stems from Dean Garraghty Software. Their 20 page ATARI 8-bit newspaper is bi-monthly. It is also available on disk. Send two stamps to borrow the latest issue and a software catalogue. What is the address I hear you holler? Don't know! The advert was in the CHIC newsletter. It took up nearly a page, but didn't include the address!!

Chris tells me that the latest addition to his computer collection is an ATARI 520STFM, that he picked up from a Car Boot sale for £25.

CHIC COMPUTER CLUB

As mentioned last time around, I have sent off for a 6 month subscription to their PC and 8-bit sigs (Special Interest Groups).
Workload and holidays were the reasons given in getting the first issues of the magazines to me. Along with the mags. came a nice glossy membership card - this must be returned when my membership expires!
The Newsletter came with an apology, as it was produced as an update issue rather than the planned full newsletter. Therefore my judgement on this 20 page (half A4 size) newsletter may not be a true reflection of what is normally sent out. WELL - WHAT WAS IN IT? Skip the first 5 pages - cover, requests, interest free finance! (Whatever next?). Pages 6 & 7 deal with their INTERNET services , and if you happen to live in the London area it is a cracking good deal! Page 8 is an article on Computer Movies - TOY STORY. The rest of the magazine deals with a lending library, adverts (both commercial and private), a response corner, the CHIC Bulletin Board, and the WANT ADS.
You get some loose pages (order forms etc.). The order forms can be used when ordering from the 60 companies who give discount to CHIC members. I had not heard of many of the companies, though 10% from SILICA SHOP (a good outlet) , and 20% off budget software from DataBecker UK seem good deals. With the newsletter comes another booklet - MST COMPUTERS SUPERSTORE. This suppliers list and the offer of hiring the full 150 page list..... OH NO! - I AM GETTING BORED!!!!

THE 8T2 newsletter supplement is the 12 page thingy for 8-bitters. Plenty of adverts for: - ATARI, AMSTRAD CPC, C64 - all very interesting - I don't think!

I'll wait for the Autumn/Winter issue (Can't be many issues a year???), before passing full judgement. Basically though, there are no long articles to get your teeth in, not much in the way of tips. So what is there ? - well ,it looks nice, there are plenty of adverts, but no way is it a Club!

MORE CONTACTS

AMSTRAD CPC PD available from: King Arthur's Domain, Brympton Cottage, Brunswick Rd., Worthing, Sussex. BN11 3NQ, and from: PD FUN, Folly Farm, Cold ashton, Clippenham, Wilts. SN14 8JR.

ALTERNATIVE MICROS (Contd.)

MORE CONTACTS

Matthew Tuck runs a small CPC Public Domain library, and also offers help and advice to CPC owners. He is at: 15 Ravencar Road, Eckington, Sheffield. S31 9GJ.

One to forget is the IEBA (Independent Eight Bit Association). They have called it a day after 18 months, along with their ZAT magazine.

The LOADSTAR On Disk Magazine for C64 owners is available from MEGATRONIX SOFTWARE, 21 Tiled House Lane, Brierley Hill, West Midlands. DY5 4LG (TEL: 01384 77172). 12 months will set you back £34.99, or try 3 months for £9.99

COMMODORE MAGIC at 5 Crane Avenue, Yaxley, Peterborough. PE7 3JH are a new PD library/Newsletter/User Support Group for the C64.

8 BIT MART is a monthly publication with articles and adverts with a bias toward C64, Amstrad CPC, ZX Spectrum and Amstrad PCW. For a sample issue, send 4 x 19p stamps to Brian Watson, Harrowden, 39 High St., Sutton-in-the-Isle, Ely, Cambs. CB6 2RA

BUG is a group for BBC and ELECTRON users. For further info send an S.A.E to: Martin Rogers, 20 Chapel Close, Acombe, Hexham, Northumberland. NE46 4RX

EINSTEIN USER GROUP

On page 5 of the July issue of OUM, I asked for you to vote with regard to a reciprocal arrangement on subscription with the EINSTEIN User Group. THREE of you bothered to contact me - not a quorum, but I must obey your orders, and therefore OUM will not go out free to the Einstein group. Too keep relationships going, I will keep in contact with them, and perhaps send them the occasional issue at my own expense.

SHARP

With regard to the review of the SHARP computers by our Muso, the following comments were recieved from Tony Adams of the Einstein group: "The MZ-80K came first, then the MZ-80A and the MZ-80B. These were tape machines, but disk drive interface upgrades were available, and Sharp marketed them under the strange numbers that MUSO quotes, as an integral package. The disk drives had their own SHARP Dos, but various software houses did their own flavours of CP/M for them. The MZ-80K is a single-density disk system, later machines are double.

OSBORNE 1

Tony Adams has this to say about the above: " MUSO didn't say very much about the OSBORNE 1. It was sold as a portable, but is actually a luggable. In other words you can carry out down to the street to load it into your car, but you need to stop and rest at frequent intervals - - and your arms get longer and longer!

Originally a single-density disk system, a fdc upgrade later became available, which would allow you to boot up in either sd or dd. The real oddity was that the built-in miniature screen was smaller than a screenful, so it worked like a window that you looked through.

Our attempts to contact BOOG (the user group) get nowhere. Are they just unfriendly, or have they emigrated to Outer Mongolia?"

MORE BITS 'N' BOBS

TYRANN

Robert Cook is currently hooked on the dungeons/dragons game TYRANN from No Mans Land at present. He is currently on to Side 2 , but is now stumped. The second side is far more adventure orientated than the Side 1, and Robert wonders if anybody knows the answers to the following: -

(I) What can he use 'The sceptre of peace' for?

(II) How can he easily defeat the warder of the West/North?

Answers please to O.U.M, or direct to Robert at: 10 THOMPSON AVENUE, BIRMINGHAM.

FREEBIE CASSETTES

Robert Cook has duplicates of some cassette software (including: DAMBUSTERS, ZORGON, XENON I, FORTH etc.). He is happy to pass them on for the price of postage. For a full list, send an S.A.E to Robert at the above address.

KEEPING THE ORIC ALIVE

A Post script from Colin Cook: " I wonder if the banner 'KEEPING THE ORIC ALIVE' on the cover of OUM is still appropriate? I can imagine it changing to ' GIVING IT A NUDGE TO WAKE IT UP', or 'APPLYING MOUTH TO MOUTH RESUSCITATION' or even 'GIVING HEART MASSAGE - NO - IT'S GONE (SOB)'. How about a competition to find the best banner for the ORIC's new vibrant life!"

NOTE FROM THE EDITOR: - oh no! Not a competition. As it happens, the irrepressible Brian Kidd has been coming up with ideas for forthcoming covers of OUM. The December issue depicts Father Xmas in his sleigh, with the caption: - THERE'S 'SNOW' STOPPING DELIVERY OF YET ANOTHER GREAT MAGAZINE!

A FREE RIBBON

No - not for your hair, but for your printer! Amongst the many items donated by Arthur Crawford at the ORIC MEET, was a Niko printer ribbon, part no. 52102001. It is for use on OKI 182/390 universal. If you have an OKIDATA printer, and want the ribbon, then please apply to OUM. Original price was £7.54p - it is yours for FREE.

NEW READER FROM FRANCE

Welcome to Jean David Olekhnovitch from Chamalieres in France. Those on the Internet can contact him on: olekhnov@iut.u-clermont1.fr

Jean David writes: "I'm a member of CEO, and I was an ORIC fanatic many years ago. I re-discovered the ORIC world with EUPHORIC, and now I'm an Orician again..... with lots of ideas and projects! I'll be happy to join OUM too."

I'm sure we all look forward to hearing more from Jean David.

AND PERHAPS A WELCOME!

Oops! I have just recieved a note from Mr.X - lost the note. He sent a book of stamps and an apology for not sending them, when asking for a copy of OUM. The note didn't bear his address, but I can't remember recieving the original letter. All I know is that he is from Hastings. If he is reading this, then I've found the letter. If not, then I've pocketed some stamps!

MORE LETTERS

DEAR DAVE,

Congratulations on another fine year at OUM! Although I don't use my ORIC anymore, I always enjoy reading through each issue- it's incredible that the momentum seems to be as good as ever after so long, and the new developments and applications are fascinating.

I'm afraid I still haven't taken the plunge with a new PC. After spending each day sitting in front of one at the office, it's hard to work up any enthusiasm for devoting free time to computing as well!

- ALISTAIR WAY (Edinburgh)

DEAR ALISTAIR,

Nice to hear from you again. In the late 80s when I was involved with computers at work (and even bringing the odd PC-XT home to work on), I found the same problem with the desire to do any serious home computing. I do ,however, remember still enjoying the games side.

At least by waiting to get your PC, you are benefiting from the dramatic price crash in the systems. The past few months have seen an incredible drop in the price of chips, memory, CD-Rom drives etc. Christmas could be the time to treat yourself! Then you send for the Emulator and see how great the Oric games you wrote look on a PC. 'GALACTOSMASH' and 'GRENDEL' really do look superb.

- DAVE

==========

DEAR DAVE,

For anyone interested, I have been involved in putting together a magazine of poetry and short stories. This should be of interest to anyone who has had enough of Jeffrey Archer novels and would like to see new writers who are not 'celebrities' in print. We also welcome feedback and comments, which would give an opportunity for those in Oricland interested in the English language to air their views.

The mag can be ordered from: J Clarke, 8 Park Hill Drive, Leicester. LE2 8HR or by telephone on 01162832435.

Please mention where you saw this ad and my name.

- KEN DUDDLE (Leicester)

DEAR KEN,

You didn't mention the name of the mag. You sent me a photocopy of the front cover, but the quality of the copy is too poor to re-produce. Anyway, the magazine is called 'THE SLUSH PILE' - a quarterly collection of work from new Midlands writers. The cover price is £1.75 - I don't know if this includes postage, and I'm not sure how you would pay for it by phone. I suppose you have to use a coin box phone, and stick your money in!

Well Ken - I hope you had a good holiday. I expect you are now playing with your new disc drive system from Steve Hopps. Welcome to the world of disc system crashes - only joking, I think!

- DAVE

==========

READERS LETTERS

DEAR DAVE,

As a former member of various Oric User Groups I was delighted to see there was still one in existence while browsing through Computer Shopper. Like most Oric owners , I guess, the lure of the Amiga and to some extent the PC became too much. Although, have myself or my daughters ever surpassed the pleasure of playing: THE ULTRA , ZORGONS REVENGE or CLASSIC RACING - I think not!!! Looking through the Amiga Public Domain I have always been astounded to see emulators available for just about every inferior home computer, but never one for the superior Oric. I was also sure that the Oric CPU would be more amenable to convert than some of the Z based processors. So, being on the verge of writing to magazines to ask how come no Oric emulators - you can imagine how pleased I was to stumble across the article in Computer Shopper.

Incidentally, my father (he is 76 years old) still uses his Atmos, being the only computer he has ever had contact with!

- DAVE CORNWALL (LAINDON)

DEAR DAVE C.,

Classics akin to THE ULTRA and ZORGON certainly don't appear on PC software to my knowledge. That is why the ORIC is still so popular with Gamesters. With the advent of the Emulators, at least you have chance to play these games, even if you don't possess an ORIC.

Nice to see your father is still using his ATMOS. I wonder if our 90+ year old ORIC-1 owner in Ipswich is still going strong. He is known affectionately as Kimbos pensioner!

- DAVE D.

AND SOME QUICKIES!!!

DAVE,

THE 'IDE' IF FOR A 'FDD' WOULD BE GREAT. TO KEEP THE 8-BIT MACHINES ALIVE, WE REALLY NEED STUFF LIKE THIS. - DAVID HARRISON (BURGESS HILL)

==========

DAVE,

I'VE CRACKED ONCE AGAIN TO YOUR HIGH PRESSURE SALES CAMPAIGN, AND ENCLOSE A CHEQUE TO RE-SUBSCRIBE TO O.U.M. I'M STILL ENJOYING THE READ - KEEP UP THE GOOD WORK. - PAUL FARNESSE (SOUTHEND)

==========

DAVE,

YOUR DETAILS APPEAR IN THE CORRESPONDENCE COLUMN OF THE CURRENT 'MICROMART' IN CONNECTION WITH ORIC MATTERS IN GENERAL AND 'ORIC USER MONTHLY' IN PARTICULAR. I RECENTLY ACQUIRED AN ATMOS AND SOME 24 CASSETTES, MAINLY GAMES..... IF ANYONE WANTS THE CASSETTES FOR THE PRICE OF POSTAGE, THEN I WILL BE HAPPY TO SEND THEM ON. - ALAN COX (ST.CLEARS)

NOTE FROM EDITOR: I WILL GET A LIST FROM ALAN AND PUBLISH IT NEXT MONTH.

==========

DAVE,

PLEASE SEND ME INFO. ABOUT 'ORIC USER MONTHLY'. I BOUGHT AN ORIC IN A CAR BOOT SALE, AND IT IS PARTIALLY WORKING. I WOULD LIKE TO GET IT WORKING, AND LIKE THE SIMPLICITY OF THE 8-BIT MACHINES. - P.NORTHMORE (WEST HAMPSTEAD)

==========

DAVE,

PERHAPS VIA 'O.U.M', YOU COULD PASS ON MY SINCERE THANKS TO PETER BRAGG FOR HIS BRILLIANT MACHINE CODE SERIES. IT HAS PROVED INVALUABLE IN MY TUITION, WHICH IS EVER ON-GOING. IT HAS TAKEN ME SOME 10 YEARS TO GET TO GRIPS WITH MACHINE CODE (ALTHOUGH ADMITTEDLY, NOT CONTINUOUSLY TRYING!) - AT LAST A 'THICKO' LIKE ME UNDERSTANDS IT, AND CAN USE IT TO GOOD EFFECT! - ROBERT COOK (BIRMINGHAM).

==========

THE ULTIMATE HI-SCORE TABLE

3D BATTLESTAR - 68,540 (level 6.0) - Steve Marshall
3D FONGUS - 150,850 - Stephane Rezette
3D STARTER - 75,400 - Robert Cook (Founder of OUM - Welcome Back)
ANTICS/SINGERIE - 131,372 - Peter Thornburn
ATLANTID - 13,990 (Duree 62) - Matthew Dick
A.T.M - 67,990 - Robert Cook
ATTACK ON KIXI - 12,500 - Steve Marshall
ARENA 3000 - 2,953,750 (level 200 - 13 lives) - James Groom
ATTACK OF THE CYBERMEN - 4,730 - Henry Marke
BERING - 168 DAYS - Graeme Burton. Still the Arcade King
BOMBYX - 28,530 - Robert Cook
THE BOTTLE - 81 - Steve Marshall Someone
BOZY BOA - 4,270 - Steve Marshall Please
BREAKOUT(IJK)- 4,720 - Steve Marshall Beat These
BRICKY - 356 - Steve Marshall Scores !!!
CATEGORIC - 23,057 - James Groom
CENTIPEDE - 59,240 - Henry Marke
CHUCKFORD - 185,050 - Robert Cook
CHOPPER - 69,950 - Vincent Talvas
COBRA - 2,699,993 - Rene Marke - Still the best there is !!!
COCK'IN - 133,057 - Steve Marshall
COCORIC - 3,620 - Stephane Rezette
Columns - see separate entry at the end!
COSMORIC - 908 - Steve Marshall
CROCKY - 142,735 - Steve Marshall
DAMSEL IN DISTRESS - 4,860 - Graeme Burton
DEFENCE FORCE - 1,268,020 - Tim Colgate
DELTA FOUR - 9,810 - Steve Marshall
DOGGY - 16,250 - Stephane Rezette
DON'T PANIC - 25,490 - Henry Marke
DON'T PRESS THE LETTER Q - 1,229,620 - Bruno Dossier
DRACULAS REVENGE - 13,600 - Graeme Burton
DRIVER - 66,500 - J-Yves Brun
ELEKTROSTORM - 25,600 - Tim Colgate
ESQUIRE - 5,650 - Steve Marshall
FIREFLASH - 69,010 - Romain Dasse
FLY FOR YOUR LIFE - 172 - Graeme Burton
FORMULE 1 - 27,487 - Arnt Isaksen
FRELON - 17,095 - Stephane Rezette
FRIGATE COMMANDER - 504 - Keith Thompson
GALACTOSMASH - 50 - Matthew Coates
GALAXIANS - 69,600 - Robert Cook & Nicholas Menoux
GASTRONON - 11,050 - Dave Dick. The Editor has a go.
GHOST GOBBLER - 32,505 - Steffan Jacobsson
GHOSTMAN - 70,000 - Elise Dasse
GOLDMINE - 60,900 (GAME COMPLETED) - Henry Marke
GRAVITATOR - 5,204 - Arnt Isaksen
GRID WARRIORS - 55,494 - Graeme burton
GUBBIE - 339,360 - Staale Eikbraaten
HARRIER ATTACK- 105,700 - Staale Eikbraaten
HELLION - 257,550 - Matthew Green
HONEY KONG - 11,436 (level 11) - Peter Thornburn
HOPPER - 40,170 - Tim Colgate
HU*BERT - 3,120 - Steve Marshall
HUNCHBACK - 750,200 - Benedicte Gareau
HYPERBALL - 15,330 - Stephane Rezette
ICE GIANT - 16,170 - James Groom
INSECT INSANITY - 149,250 - Dennis Bonfield
INTERTRON - 10,800 (level 15) - Brian Kidd
INVADERS (ARCADIA) - 3,390 - Steve Marshall
INVADERS (IJK) - 23,650 - Peter Thornburn
INVADERS (PSS) - 5,530 - James Groom
IMAGO - 8,010 - Stephane Rezette
JEUX OLYMPIQUES - 50,147 - Arnt Isaksen
JIMMY POUBELLE - 11,440 - Peter Thornburn
KARATE - 23,800 - Arnt Isaksen
KINGDOM - 109 - Graeme Burton
KRILLYS - 28,290 - Graeme Burton
KROKATILE WALTZ - 10,025 - Graeme Burton. G.B SCORES A HAT-TRICK
LIGHT CYCLES - 4,530 - Steve Marshall (Come on Peter!)
LOCHNESS MONSTERS - 14,683 - Graeme Burton
LODE RUNNER - 16,738 - Arnt Isaksen
LOKI - 62,675 - Tim Colgate
LONE RAIDER - 80,500 - Espen Andersen
LUNAR MISSION - 13,129 - Graeme Burton
MACADAM BUMBPER - 197,500 - Irene Marke

MANIC MINER - 38,156 (AT THE CENTRE OF THE EARTH) - Graeme Burton
MANIC MINER with infinite lives - 115,583 - Robert Cook
MAHJONG - 16,200 (Cleared level 5 twice to give 6 levels) - Henry Marke
M.A.R.C - 1,560 - Graeme Burton
MARIO BROS - 396 - Steve Marshall
MAZE RALLY - 88,920 - Graeme Burton
MIDNIGHT FEAST - 1,500,120 - Henry Marke
MINED OUT - 4,100 - Graeme Burton
MLUCH - 22,000 (All 18 levels completed and 7 lives left) - Henry Marke
MR.WIMPY - 16,549 - Espen Andersen
MUSHROOM MANIA - 471,420 - Tim Colgate
OLIVE AND POPEYE - 69,570 - Rene Marke
OPERATION GREMLIN - 22,617 - Graeme Burton
ORION - 61,200 - Stephane Rezette
ORIC MUNCH - 895,439 - Michel Leclerc
ORICAL INVADERS - 1,790 - Steve Marshall
PAINTER - 103,850 - J-Phillipe Merc
PAINTER (with 255 lives) - 143,310 - Peter Thornburn
PANIC - 823 - Peter Thornburn
PASTA BLASTA - 34,480 - Matthew Coates
PIERROT - 6,270 - Steve Marshall
PLAYGROUND 21 - 92,000 - Tim Colgate
PSYCHIATRIC - 41,070 - Henry Marke
PROBE 3 - 2,450 - Robert Cook
PROTECTOR - 99,594 - Thierry Avannier
Q*BERT - 15,470 - Dave Dick
QUACK A JACK - 95,671 - Colin Cook
QUARKFLIGHT - 709 - Graeme Burton
RABBIT - 169,760 (level 29) - Peter Thornburn
RATSPLAT - 20,150 - Staale Eikbraaten
ROCK RUN - 2,264 - Paul Hutton
SCUBA DIVE - 9,000 - James Groom
SNAKE VENOM - 102,822 - Staale Eikraaten
SORVIVOR - 1,155 - Romain Dasse
SPACE WALL - 3,248 - Brian Kidd
SPOOKY MANSION - 2,100 - Steve Marshall
STANLEY - 43,480 - Romain Dasse
STRESS - 1,688 - Peter Thornburn
STOCKMARKET - 82,936 - Graeme Burton
STYX - 194,600 (wave 18) - Graeme Burton
SUPER JEEP - 138,250 - Stephane Rezette
SUPER METEORS - 364,700 - Graeme Burton
SUPER ADVANCED BREAKOUT - 17,050 - Arnt Isaksen
TALISMAN - 8,068 - Elise Dasse
TETRIS - 2,411 - Jon Haworth
TETRIS GB - 15,835- Henry Marke
TETRIX - 9,983 - Henry Marke
THEM - 2,400 - Steve Marshall
TRIATHLON - 5,270 - Stephane Rezette
TRICKSHOT - 4,128 (screen 14) - James Groom
TRIDENT NEPTUNE - 7,200 - Dave Dick
TROUBLE IN STORE - 1,060,758 - Graeme Burton
TWO GUN TURTLE - 9,980 - Steve Marshall
ULTIMA ZONE - 148,860 - Staale Eikbraaten
ULTRA - 35,780 (level 32) - Peter Thornburn
VIDEO FLIPPER - 55,350 - Graeme Burton
VISION - 285 - Brian Kidd
WILLY - 624 - P.Hutton
XENON I - 117,230 - Eric Eduezi
XENON III - 9,927 - Staale Eikbraaten
YAHTZEE - 306 - Dave Dick
ZEBBIE - 945,560 - Staale Eikbraaten
ZEBULON - Completed in 8 minutes - Henry Marke the Gamesmaster.
ZOOLYMPICS - 13,677 - Graeme Burton
ZORGONS REVENGE - 155,830 - E.Tollemer

COLUMNS -
O/E- 235,650 - Brian Kidd
O/H- 4,725 - Liz Coates
F/N- 5 secs - Brian Kidd
O/N- 16,485 - Henry Marke
F/E- 3 secs - Brian Kidd
F/H- 8 secs - Henry Marke

Machine Code for the Oric Atmos (Part 56) Peter N. Bragg

The Story so far

Recent articles have looked at some useful programming techniques and the last issue looked at the subject of saving and loading, to and from cassette tape.

As a postscript on that subject, I should mention that I used three tape recorders over the years. The first was a good hi/fi machine, which turned out to be rather unreliable for computer tapes. Perhaps the Oric doesn't appreciate our kind of music !! I then followed advice and went out and bought a cheap Hitachi mono tape recorder, which was much better.

Later on I added a pocket sized Phillips Data Recorder, which I still use on occasions. This has an automatic gain control and so you don't have to set the volume for saving. However that automatic gain control could cause problems. Quite often, the saving would start off at full volume and then drop sharply after the first half second or so. I got around that problem by using a line of Basic to save several copies of each piece of software, in one go. If the first copy failed to load, the second copy was usually OK. The extra copies are always useful as backups anyway.

The other main problem, with using cassette tapes to store software, appears to be the ageing process. Now most computers have disk systems, the cassette tape system, can lie unused for a year or more, in my case. As a result, old software tapes can become difficult to load, even when the same cassette recorder, that originally saved them, is used in the attempt to reload them.

At first, I thought that the quality of tapes was the main cause of the problem. However, I have also noticed a slight deterioration on some of our older music tapes. The human ear is very adaptable, particularly when listening to a favourite piece of music and so a small deterioration is acceptable and at times, probably not even noticed. A computer lacks that adaptability. For a computer, the smallest loss can mean failure to load.

Disks tend to be more permanent because a disk has only two magnetic recording surfaces in very close proximity to each other. A tape spool can have hundreds of layers of magnetic recordings stacked very tightly on top of each other. The ferrite material in those layers is not very permanent, it would be useless for recording if it was. As a result each layer of tape is subjected to the magnetic fields of the many other layers of tape, above and below it and in time is bound to be so affected that the recorded data becomes gradually more and more corrupted and blurred. On some tapes, I have noticed that the files have deteriorated in little more than three years.

The only real solution to this problem seems to be covered by the classic phrase, "use it or lose it". This way, you do at least get some advance warning of the deterioration in time to do something about it.

There is a new technology on the horizon, which may offer an alternative to the traditional disks and tapes. That is the recordable "CD". Most of the machines I have seen so far, seem to be expensive and large. No doubt that will change. It will be interesting to see if they can provide storage facilities for older eight bit machines such as the Oric.

That more or less covers the subject of cassette tape storage of software. Now we will go on to something new to this series, the subject of interrupts.

Stop talking, when I'm interrupting !
---------- An old music hall line perhaps, but there is some truth in it for the world of computing. So, just what is an Interrupt and how is it used ? I think that the best thing at this stage is to have a general look at the Interrupt operation, in other words a kind of overview, before going on to specific operations.

Essentially, an Interrupt provides the necessary facilities to break into a running program and re-direct the computer to do something completely different for a brief period, before returning to the original program and resuming operation at exactly the same point, where that original program was interrupted. This allows a fairly simple set-up, such as the Oric, with it's 6502 microprocessor, to control many different operations, all apparently taking place at the same time.

The key word here is that word "apparently". The Interrupt controlled switching from one operation to another is done so quickly, that several different operations can be made to look as if they are all running simultaneously.

The computer operating system makes good use of the Interrupts. For example, the display needs constant refreshing and updating, or it would disappear in a fraction of a second. This can be handled by the Interrupt operation in a way that is so fast and transparent, that the user is completely unaware of of any interruption, to the main program in use.

A Key Operation
---------- The very first thing that happens, when you switch on any computer, is that it loads up and runs an operating system of some sort. This may not be, the full operating system, but it is usually enough to allow the computer to respond to a signal from you, the user which tells it what to do next.

A good illustration of this is provided by the Oric system. For example, take the Oric on it's own, with just the power pack and monitor/TV. Switch it on and after a second or so it will settle down to give you a more or less blank screen, apart from a couple of lines of system information. It will then stay like this until it receives some kind of input from you.

What has happened at this stage, is that the Oric has booted up and gone to a set of routines, built into the ROM chip, which then loop round and round continuously. These routines do a number of operations such as keep the screen display going and check out the keyboard to see if a key has been pressed. If nothing more is done, the Oric will remain in this state, maintaining the display and checking the keyboard, etc, for as long as it is switched on.

Obviously the next move is to press a key. Immediately the Oric will respond to that, by some action such as displaying that key's character if possible, and also storing the appropiate code of the key that was pressed for future use. The reaction appears instantaneous and any visible result is on view, long before you can lift your finger from the key that you pressed.

So how was it done so quickly ? The answer is quite simple. A counter/timer in the Oric circuit counts down from 255 to zero and then starts again from 255 counting down to zero. Each time the counter reaches zero, it produces a signal which activates the Interrupt system in the 6502 microprocessor.

The Interrupt has an immediate effect and the computer jumps to a special set of routines, one of which can check out the keyboard for a key press. At the end of those routines the computer is restored to the same state that it was in before the Interrupt system was activated and the computer then returns to what it was doing, before it was interrupted.

You might think that this whole operation would take a long time, but in fact it happens about 100 times a second and is so quick, that it is quite transparent to the computer user. The keyboard check goes into operation on every third time that the timer/counter activates the Interrupt system.

So essentially, the Oric's operating system looks at the keyboard thirty three times a second, to see if you have pressed a key and it will make this check, irrespective of anything else that might be going on in the computer at the time.

A VIA chip provides the counter/timer, for the timing, but the question is, how does it work ?

The answer is that the VIA chip software is set-up so that every time the counter reaches zero. it sends an electrical signal down the line, into the microprocessor, which activates the Interrupt operation, which then takes effect immediately after the current instruction has been executed.

We can now ignore the counter/timer and it's software set-up for the present and just concentrate on the fact, that the Interrupt is activated by an electrical signal into Oric's 6502 microprocessor. That electrical signal does not have to be supplied by the VIA chip, it also can be produced by any suitable hardware, both internal and external to the computer.

So to sum up what has been said so far, the Oric hardware provides the 6502 microprocessor with a regular supply of electrical signals to the Interrupt system, in order to keep essential services, such as the keyboard and screen display in operation.

Is your interruption essential ?
---------- In some cases the answer to that question, might be no ! If for example, the computer software was doing something, where speed was an essential requirement, you could gain speed by reducing the number of keyboard scans for a short period, without too much inconvenience. However, if you did the same to the operations that update and refresh the display for any real length of time, you would end up with an unpleasant flicker on the screen display.

So some Interrupts are more important than others and must be done on time, but there are others which can be temporarily ignored, in order to gain other benefits, such as speed of operation, when required.

Obviously it is an advantage if you could turn the Interrupt system off, or disable it by masking out some of the less urgent operations, without affecting essential services such as the screen display.

Fortunately, there is such a facility available to the Oric. The 6502 microprocessor, can be set to ignore certain Interrupts. This facility is provided by the Interrupt Mask bit which is located in the Status Register.

We can have a look at this aspect of the Oric's Interrupt system next time.
.....See you then.

O R I C 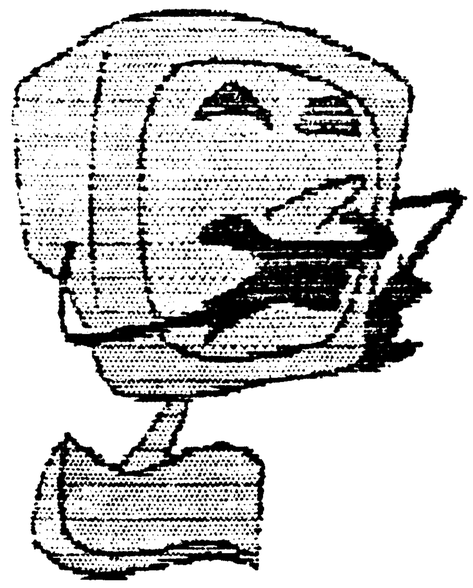 MEET 1996

Saturday July 20th was the date, and Aylesbury again the venue for the annual ORIC MEET. The sun shone all day, with temperatures in the high seventies (Fahrenheit) - who needs centigrade, litres,kilos etc.!!

Jean Boileau had been the first to arrive, having been in Aylesbury since about 10 p.m. on the Friday. It is great to see Jean making the trek from Paris every year - we really do appreciate his efforts to make it, and really do enjoy his company.

Jon Haworth was in early demand from people who had been waiting a while for orders from him. Not much in the way of demos this year. It was more a Meet of chat, with many problems being resolved. Robert Cook had brought along a cassette demo of his Krystal Worlds II adventure. After trying a couple of cassette players, numerous settings, and lots of cursing, the demo was finally loaded. I issued a couple of commands (e.g. NORTH, LOOK) and the game crashed. The turn out was excellent. New attendees from previous Meets were:

Chris and Adam Evans, Paul Hill, Stephen Meachen, Sue Crisp

From previous years we welcomed:

Ron Evans, Jon Haworth, Chris Hearn, Jim Groom and Bam, Derek Smith and Wife, Matthew Coates, Bob Terry, Steve Hopps, Jonathan Bristow, Peter Thornburn, Stephen Friend, Arthur Crawford, Robert Crisp, Robert Cook, and Jean Boileau.

Also along for the experience was a local school teacher (Mr. Robertson), who,though not an ORIC owner, has an interest in computers, and thoroughly enjoyed the day.

Nowhere near our biggest Meet, but very pleasant all the same. Apologies were received from: Peter Bragg (illness in the family), David Goodrum (was sent on a course at the last moment), and John Peach (late returning from holiday).

The raffle went on forever (see page 4), the beer flowed, and we were kept from going hungry thanks to the food from a local chippy.

Bargains were had - cheap software and hardware kept a few happy. Paul Hill decided to get rid of his Atmos and disk system, and just use the Oric Emulator on his PC. His disk interface was snapped up by Stephen Meachen.

Thanks to the twenty Oricians who held Jonathan Bristow down and thus allowed me to wrench his padlocked purse from his belt. I prised it open and used the sole £1 coin for a raffle ticket!

Peter Thornburn (MEATLOAF as young Matthew Dick prefers to call him) had brought his young son along. Thanks to my PC and the Emulator, we kept him amused with some classic arcades. With son in tow, Peter decided not to go for the beer drinking contest this year. This generally starts at Noon officially, but Peter has often a few cans stashed as a starter. With Peter out of the reckoning it was left to the young pretender to the throne to go for it - Robert Cook was that man. I had kept the bar open until 4.p.m, and then arranged for the stewardess to return at 6 - as Treasurer of the social club, and having a tenner to wave can work wonders.

By 6.30 there were only a few of us left. That evening I had been booked to do a Disco at the club. A small turnout was boosted by Robert, Jean, Jim and Bam from the MEET. At about 10 I bade farewell to Jean, and my wife Ann drove him to the pub where we had him booked for Bed and Breakfast. Robert was merry by now, and very chatty. It is a wonder that I can't remember some of the stories - heard each one a few times. We did manage to palm him off on another Brummie for a while - why isn't that guy talking to me anymore.!!!

Ann eventually got Robert into the car, and to the pub, where he asked if he could still get a drink. The landlord duly obliged. Robert, who did not feel too well next morning, is duly elected as Drinker of the MEET. I'm sure Maggie will be pleased to read this - you do let her read OUM don't you, Robert???

I think I finally got home about 1.a.m, and at 2.30 a.m. we left on the long drive to Cornwall. Not surprisingly, most of late Sunday morning, and early afternoon was spent sleeping. An exhausting weekend, but worth every minute of it. Thanks for making the effort, and I hope to see you all again next year.

Having read Jonathan Haworth's plea in June's OUM, I thought I'd better send a version of this document through for those without 'net access to peruse.

Just by way of a brief explanation - this is the current version of the document and figures as found on the comp.sys.oric newsgroup, ftp.ensica.fr in pub/incoming/ORIC, and http://www.ensica.fr/~frances/hardware_english.html for those with web capability. By it's nature, the document gets technical at times - don't panic!

A point to note from the Theoric article - the timing diagram of figure 3 is a little idealised, and doesn't quite match the true behaviour. However, it would be a good idea to read that article before this one as a warmer-upper, otherwise this could be a little hard going!

****

* The ORIC 1/ATMOS Unofficial ULA Guide *

****

Design and text by:- Mike Brown
Email:- mjb@pootle.demon.co.uk

Date: 1st June 1996, Version 1.02 (OUM)

PURPOSE

This document is intended to begin to clear up the ongoing mystery of what the contents of the ULA within the Oric/Atmos are. This design is based on observed behaviour of the ULA, the small amount of documentation on the ULA and its use, and knowledge of computer hardware design in general. It is not intended to be an authoritative or definitive schematic.

DISCLAIMER

This document and attached figures are for informational purposes only. It does not represent the exact contents of the HCS10017 ULA as used in Oric and Atmos computers. This is my interpretation of the hardware likely to be required to perform the same task, prepared without actual knowledge of the contents of the ULA. This document and attached figure is being placed in the public domain to aid understanding of the operation of the above mentioned chip, and is for example only. Any similiarities between these documents and any actual documentation referring to the genuine HCS10017 are coincidental, by-products of parallel evolution, and not an attempt to breach any copyright or patent statutes which may exist.

CONTACT POINT

As a Computer Science graduate from Warwick University, and long time Oric user, I would be very interested to hear feedback on these documents etc. If you feel you can help clarify any of the explanatory sections, or can offer any extra hardware knowledge, please do! I intend this to become a growing document, not just a one off, and so please offer any input. I will happily accept E-mail at mjb@pootle.demon.co.uk, and follow comp.sys.oric and OUM, so I should pick up on any developments.

Thanks also to Fabrice Frances and Jon Haworth for helping with some of the "detail niggling" to get to V1.02. Also, since V1.01 I've been confirming some of the timings etc. using an oscilloscope on a real Oric, and so these are now more accurate. This is reflected in a few design changes, and also a few additions.

==========

FUNCTIONAL BLOCKS

Although much discussion has taken place on "reading the program" in the ULA, I don't believe that there is any such program to read. The ULA consists of a custom built circuit, and is not a programmable device.

Technical note:- A ULA or "Gate Array" is formed from a chip made entirely of (for example) thousands of NAND gates, all laid out, but unconnected. Each specific application requires a set of metal track deposited to complete the circuit, done at manufacturer as a final step.

The ULA performs several "visible" tasks which are closely integrated. These are:-

- Address Decode Logic
  Select lines for VIA chip, ROM, RAM areas of memory subject to state of ~MAP signal.

- Bus Clock signal production
  Division of 12MHz source clock into 1 MHz processor clock, internal 6 MHz dot clock

- Memory Multiplex (6502 versus Video arbitration)
  Interleaving of access to DRAM on two halves of 6502 cycle, one half to a single 6502 access, the other to one (or, in lores/text two) video accesses. Further multiplex of 16 bit addresses to 8 bit Row and Column format for DRAM

- Video signal production
  Acquiring video data from DRAM, conversion to pixel data via character sets (for lores modes), output as RGB ink and paper values. Provision of sync signals for display device

- Memory Refresh
  Side effect of rapid sequential access to DRAM by video circuitry, causes every row to be guaranteed to be read within the required time.

- Control/Sequencing
  Externally, provides ~RAS ~CAS and R/~W control signals for DRAM along with row and column addresses from multiplexer. Internally sequences movement of data through ULA

CIRCUIT DESCRIPTION

Video Address Generator, Sync/Blanking Generator, Memory Mapper and Timing

Refer to Sheet 4/7

Operation:

The crystal generated 12MHz clock in Oric is fed to the ULA at pin 7. This is used by the control logic later, and divided by 2 to provide the dot clock used for building of the TV picture. This is then further divided by 6 to provide the 1 MHz clock for the system, found at pin 14. Note that in the timing diagrams of sheet 1, the 1 MHz clock is assymetric, and this is why a 2MHz part is used in Oric. The effective time available to the 6502 is that of a 1.5MHz clock, with the ULA taking more than half the cycle.

To generate the picture, we require two counters to count our position across and down the screen. The first of these is a 6 bit counter, and this is clocked at 1 MHz, counting a total of 64us across one complete scan line of the picture. Although it may be conceptually easier to view each scanline starting at 0 end ending at 63, it is simpler for design purposes to start the video waveform at count=0 and displace blanking and sync to the end of the count. Also note that the position and width of the sync pulse (horizontal and vertical) is placed approximately half way along the blank portion.

Each column of Oric's screen is represented by 1us of time, subdivided into groups of 6 pixels. From this 6 bit counter, combinatorial logic is used to derive sync and blanking signals. The blanking signal is used both to suppress video outside of the screen area (border, flyback etc.). The sync signal is provided to synchronise the display device to the internal counters.

The remaining signal, SelReload, resets 3 of the registers to default values at the start of each scanline. These are r0, ink = 111b, r1, style=000b and r2, paper=000b).

The second counter increments for each complete line scanned, and counts through one of two numbers of cycles, depending on the refresh rate in force (50/60Hz). This too uses combinatorial logic to derive sync/blank signals, and further an end of vertical frame signal, which resets the counter after either 312 (50 Hz) or 260 (60 Hz) lines. For HIRES mode, a signal which identifies line 200 (the beginning of the text area) is derived. This is used to set a latch forcing certain behaviour for the end of screen, see later.

Each time the vertical counter is reset, a further counter/divider is clocked, counting 32 frames before toggling. This is later used to implement flashing graphics.

The individual sync and blanking signals are combined to provide a composite sync video signal at pin 16, and an internalcomposite blanking signal.

For Combinatorial Block A, the logic can be described from the timing information gathered as:-

HBLANK = H5 AND (H4 OR H3)
HSYNC = H5 AND H4 AND ~H3 AND ((~H1 AND ~H0) XOR H2)
SELREL = H5 AND H4 AND H3

For Block B:- (50 Hz operation)

VBLANK = V5 AND V6 AND V7
VSYNC = V8 AND V2
VFRAME = V8 AND V3 AND V4 AND V5

where Hx and Vx are bit x of the Horizontal or Vertical Count

The vertical count is then processed according to graphics mode and whether double height text is selected.

Ignoring the "divide by 2 block" for the moment, normal text processing proceeds as follows. The address to be fetched from the screen is calculated from the text line down the screen (b3-b7) multiplied by 40, plus the text column across (b0-5 of horiz counter). Two points - the divide by 8 of vertical count is to cast aside the 3 bits expressing which scan line we are on - this has no bearing on the lookup address for the ASCII code, but does on the character definition later, hence these 3 bits are preserved as "Character Row Count". Multiply by 40 is expressed as a multiply by 10, and then a bit shift of 2 (hardware implemented by skew-wiring).

In text mode, when double height text is selected, this is effected by causing the character lookup to lookup the same scan line twice in the character definitions (this draws the one half of the letter filling one line). Although the vertical count is being "altered", the screen will still continue to scan out as normal, and so lines end up duplicated during the double height period. The lowest bit of the "row number" (found in b3-b7) is shifted over into b2 in this process, causing even lines to have the top half of the character (scan lines 0-3) and the odd lines to have the bottom half (lines 4-7). This gives an assumption that all text starts on even lines, and explains the bug where bottom halves of text appear above the top half.

When the 13 bit result is calculated, the base of the screen address is then added (a constant BB80hex for text/lores) and the address is ready as "Video Address Phase 1". The process so far acquires the ASCII character only, and is the precursor to "Character Definition Lookup".

In hires mode, the address to be fetched is calculated from the scan line down (we include the three bits removed for text mode), also multiplied by 40. The base address for the hires screen is added (constant A000hex) and the address is ready as "Video Address Phase 1".

Observations and Notes: As we know that the counters and addition circuits will be limited to certain values, the number of bits can be limited. I have checked thoroughly that there are enough bits to successfully work, even though it may appear that some sections are one bit short. F.E. - 9 bit vertical counter needs to be able to keep time for about 260 or 312 lines, however our usable picture area, top to bottom, is only 0-223 lines, so only 8 bits need processing by the memory mapper. All 9 bits are available to thecombinatory logic.

Division by 2 and 8 blocks - I picture these like "switches" that either route straight through, or 1 (3) bits right. At chip level these would be routing transistors.

Although no fetch [should] happen, as the counter reaches column 40->63 the memory mapper will continue to lookup data. This in fact models the real ULA correctly, from experiments. Also, the ULA continues to lookup character definitions when an attribute is found, and during hires mode, although this information is not actually used.

While developing this, I also noticed that if the HIRES screen didn't have some lines of text at the bottom, it would actually run off the end of its allotted area (A000 hex to BFE0 hex). e.g. Line 200 is at #BF40, 201 = #BF68, 202 = #BF90, 203 = #BFB8, 204 is into "unknown" territory, and is therefore suspect, 205 is into the ROM! (#C008). But, the total number of theoretically available lines is 200 + (8*3) = 224. So are the text lines a necessary thing? What if you program a screen which is entirely HIRES? Or has only one text line? Do you see junk between line 204 and the start of your text line?

The answer to this came in the form of a small redesign around the text/hires selection. The real ULA forces hires to end at line 200 irrespective of attributes prevailing at the time. The text/hires selector output is therefore modified to text for lines 200 onward, hence you can have more than 3 lines, but not less. Note that this affects four things :-

- In HIRES mode, hires part of screen, double height is ignored
  text part of screen, double height operates
  In TEXT mode double height always operates

- In HIRES mode, hires part of screen, vertical count is used directly
  text part of screen, vertical count is divided by 8 as per:-
  TEXT mode where vertical count divides by 8, described above.

- In HIRES mode, hires part of screen, the base address of calcs is A000hex
  text part of screen, the base address is BB80h
  TEXT mode Base address is BB80h

- In HIRES mode, hires part of screen, control and seq looks up char defs,
  and then does not use them.
  text part of screen, these are used as bit data
- In TEXT mode these are used as bit data

The line-200 force does not affect the base address of the character set.

- In HIRES mode, hires or text part, lower address (9800h) used
  In TEXT mode, upper address (B400h) used.

Address Decode, Video Generation, Character Definition Lookup, Selectors

Refer to Sheet 5/7.

Operation:

The address decode block provides two signals for external enables. A8 through A15 (pins 32,33,31,15,35,22,29,30), 1 MHz clock and MAP (pin 26) are used to derive enable signals for the ROM and VIA chip :-

When the address present on the bus is in the range 0300h-03FFh, I/O (pin 25) is taken low.

When the address present is in the range C000h-FFFFh, ROM select (pin 23) is taken low, unless MAP is asserted. In this case, the address will be treated as a normal RAM address allowing access to the "shadow" ram at C000h-FFFFh.

When the address is in the range 0000h-BFFFh, it is taken as a normal ram access, unless MAP is asserted. In this case, no RAM access takes place (this is to allow external peripherals to drive the data bus for data reads)

The external data bus, D0-D7 (pins 8,17,11,12,13,5,34,18) is buffered into the chip onto an internal databus. Note that the ULA never outputs data to the bus.

When in HIRES mode, the video address generated in phase 1 is outputted (see memory mux/control for description) and the data fetched is interpreted either as an attribute (see later), or literal pixel layout. This is loaded to a holding register for later loading to the shift register for output. For an attribute, 0 is loaded to the holding register (all paper colour). bit 7 is available to the video inverter on loading of the shift register, and if set, inverts the video. For an attribute, Load 0 is used to ensure no video inversion takes place.

For text mode, a further stage must be done. The video address (phase 1) points to an ASCII value, which is fetched, multiplied by 8, has the "Character Row" count (0-7) added to it. This gives an offset into the character definition. A base address is added (9800h hires mode, B400h text mode) and an offset for standard or alternate character set (0h or 400h) before a 16bit Video Address Phase 2 is generated. This is output as for the phase 1 address, and the resulting data is now a bit pattern to go to the holding/shift registers.

The fetched data, if an attribute, is used to update one of four registers inside the ULA. These 3 bit registers hold the ink and paper colours, the "style", and the "mode". The allocation is :-

Reg	Name	b0=1(0)	b1=1(0)	b2=1(0)
r0	Ink Colour	R	G	B
r1	Style	Alt(Std) Dbl(Std)		Flash(Std)

r2	Paper Colour	R	G	B
r3	Mode	xxx	50Hz(60Hz)	Hires(Text/Lores)

These are set to the defaults at the start of each scanline, namely white paper, black ink, no flash, no double height, standard character set.

A simple decoder updates these registers if b6 of the fetched data is 0 and uses b3,b4 to select the register. Bit 0-2 of the fetched data is then latched into the registers. Of course, the 6-bit shift register must be loaded with all zeros if an attribute is read (continue drawing in paper colour). The signal IsAttrib is used to modify the ULA sequence accordingly, so that 0 will be loaded to the holding register.

The contents of the style and mode registers are used as "selectors" to the timing, memory mapper and character definition units to modify their behaviour, as seen earlier. Flashing is used to allow the flash clock to modulate the video signal to paper colour for flashed areas. Registers 1 and 3 are therefore always output enabled.

If the fetched data is not an attribute, it is pixel data to write to the screen. It is loaded into the shift register, as discussed for text and hires modes, which the shift register clocks out at 6 MHz to the screen.

The 6MHz bit stream represents Foreground or Background colour as stored in the two "palette registers", r0 ad r2. The video stream is modified by the flash clock, if required by the flash selector, and then used to select which of the two registers will output an RGB value. If Inverse video is in operation, the sense of RGB will be inverted (hence inverse video always inverts both foregrond and background), and if blanking is in operation, the output will be forced to black (RGB=000). This signal is made available at pins 21,20 and 19 respectively.

Observations and Notes:
The multiply by 8 and add of character row count is again easily done by skew wiring of bits, and then placing the 3 bit count in the lower 3 (empty) bits of the result.

Adding of the two offsets for graphics/text and std/alternate works like this. For Hires mode, the data starts at 9800h, and for text, at B400. So the top bits need to be :-

Hires	Text	
1	0	b11
1	1	b12
0	1	b13
0	0	b14
1	1	b15

As can be seen, b12,b14,b15 can be hard wired. If the text selector is 0=Text 1=Hires, then b13 = ~selector and b11=selector.

However, we need to (possibly) add a further 400h to this value. So an adder is placed to add in either 0 or 0400h to the appropriate bit pair.

Memory Multiplex, Control and Sequencing

Refer to Sheet 6/7.

Operation:

The memory multiplexer is used to combine the video address, and processor address, and then further split these into row and column addresses for the DRAM memory. The video address from phase 1 or 2 is split into row (a0-a7) and column (a8-15) addresses. These can then be combined with the upper (column) addresses from the 6502, and an external mux IC is used to combine the result with the lower (row)) addresses of the 6502.

In operation, the 6502 Row (A0-A7) is presented through the external mux, and RAS asserted. Then the 6502 column (A8-A15) is presented via the ULA internal mux and external mux, with CAS asserted. On the other half clock phase, the video Row is passed through the internal and external muxes, then RAS asserted, followed by video Col, with CAS asserted.

Which of Video Addr Phase 1 or 2 is sent is dependent on whether we are using text mode, and whether we are in the second part of the cycle

These operations are done through the signals VA1x VA2x and BAx.

A 6502 access is performed by setting the Ext Mux signal to pass the A0-A7 (Row) address externally via IC8/IC20 to the DRAM. Next, Ext Mux is set to allow the ULA access, and the Column address is latched and passed using BAL and BAC, respectively.

When a valid video address (phase 1) is generated, VA1L [Video Address 1 Latch] causes the 16 bit address to be clocked into both 8 bit registers. Then, VA1R [Video Address 1 Row] outputs the Row address to the bus and out to the external mux, which is set to pass this through using the Ext Mux signal, pin 1. Next, VA1C [Video Address 1 Column] passes the column address in the same way.

A valid video address (phase 2) is handled similarly, using VA2L, VA2R and VA2C.

The control and sequencing block supervises the overall running of the chip.
It uses:-

- 12 MHz clock for sequencing etc
- Ram Select
- R/W from 6502 (from pin 27)
- Selector for Hires/Text, subject to line-200 modification
- Isattrib signal

It provides :-

- Enables and clocks to bus devices
- RAS/CAS/R/W to RAM (RAS on pin 10, CAS on pin 9, R/W on pin 28)
- External mux control (pin 1)

This block sets all the timings used throughout the chip.

Control and Sequencing - Detail

Refer to Circuit Sheet 1 and 3 for the following text.

Having made many timing measurements, I can now state the contents and operation of this section with more confidence. The flowchart on sheet 3 shows a complete cycle (1 microsecond) of the ULA/processor combination. Each of the phases of operation are marked with a letter (Q through to Q), and should be viewed alongside the timing diagram of sheet 1.

At time "Q" the 1 MHz clock has just risen, and this clocks the horizontal counter, and possibly the vertical counter (by carry). This results in a new pair of values being available. These new values are multiplied by 10, added to each other, and added to the base address for the mode in force. No clocks are used to control this process, hence (ASYNChronous). By time "b", this will have stabilised, and the address is latched into the phase 1 address.

Meanwhile, at "Q", the 6502 phase began. So it will have a valid address on the main address bus. The R/W out follows ~R/W in, MUX is asserted to allow the row address through the external multiplexer. Then :-

For a Write cycle, the 6502 places its data at time "s". RAS is asserted. Then MUX is returned to 0, and the column address is presented through the ULA at "t". CAS is asserted, but only if this is actually a RAM write. Note that it is asserting CAS here that performs the write.

For a Read cycle, RAS is asserted. MUX iz returned to 0, and the column address is presented through the ULA at time "t". CAS is asserted, if this is a RAM access, and the data is read by the 6502 some time later at "x".

The DRAM R/W is then forced to "read". The ULA access cycle begins.

The Phase 1 address developed above is passed as first the ROW and then the COL address in two parts, asserting RAS and CAS respectively. At time "h", the available data is read and transferred to the holding register for the S/R. It is not yet known whether this will be used. It is also available at the input of the attribute decode, but it is not known whether it can be used.

Some time after the byte is read, the result of adding the text/hires offset and std/alt charset offset is available, and latched as phase 2 address at "j"

In this way we have covered all possibilities of dataflow for text/hires or attribute. Next, irrespective of mode, the phase 2 address is output as ROW/COL as before. If this is hires mode, the data so retrieved is ignored, the S/R is loaded from the previous value above, and the cycle ends. If text mode, the data byte retrieved is the bit image of the character set, and is loaded to the holding register over the (now known to be) ASCII value previously held. If this is an attribute, it is processed at "k", updating the selectors, and 0 (paper colour) is loaded to the holding register at "p"

At time Q the shift register reloads, and the cycle begins from the top.

These timings are partly speculative, and are derived from actual measurement of external signals as on sheet 1, and fitting internal operations in the correct order between these externally visible activities.

Also note that the ULA looks up and throws away much information. This results in a simpler design, and does no harm. So far, we have accesses that extend beyond the right and bottom edge of the screen, and also now character definition lookups in Hires mode, and even for attributes!

So from this, we can develop the sequencer logic as on sheet 7. Although this looks frightening, the behaviour echos that of the flowchart and timing diagram above.

The chip at the top provides a moving pulse, from "Q" through to "p". This moves along on both transitions of the 12 MHz clock, giving the 24 time slots used above.

Each signal can be derived by combinatorial logic from these. For example, working down the right side :-

MUX is active in time slots "r" and "s"
R/W follows R/W in from "Q" to "x", and is forced to read from "A" onwards.
RAS is asserted at times "s","c" and "k". Coincidentally, CAS is deasserted.
RAS is deasserted at times "w","g","o".
CAS is asserted at times "u","e","m". Note "U" is the 6502 access, and
depends on this actually being a RAM access!
VA1R is enabled through times "b" and "c"

...etc...

BAC is enabled to at times "t" though "v", but again only if the 6502 is actually doing a RAM access.

Down the left, we have :-

...etc...

AttrbDec is active at "k" if the byte fetched is an attribute.
Load Reg 0 is active at "p" if the byte fetched is an attribute.

Data Bus is enabled at "h" to get the first byte (also into reg via "Load Reg"). Data Bus is further enabled at "p" if not an attribute, and not hires mode to get the character definition data (also into reg via "Load Reg")

Video Signal Timings

Refer to Sheet 2/7 for the following text.

Finally, this section replaces the old Figure 1 (speculative video timings) with actual measured figures. Shown at the top is one single line across the screen. The sync pulse occurs during counts 49,50,51 and 52 of the horizontal count. Note that the 1 MHz clock is shown only for reference against the timings - the count increments on rising edges of the 1 MHz clock.

The lower digram shows the last 4 scanlines, and then the vertical interval. The sync pulse here is 4 scanlines long (note that there are no "serrations", positive going horizontal pulses during the vertical sync).

Closing Notes

Previously, I wrote

>Although this schematic is in no way a complete circuit, it outlines the
>essential building blocks of the ULA. I am now working on filling out some of
>the detail, but would like some feedback on the project as it is to see if
>people agree with the design so far. I also need some time to make some
>actual timing measurements, and do a few programming tests. Maybe a handful
>of revisions down the line we'll have a 12 inch square piece of veroboard
>smothered with TTL, radiating heat and RFI like no tomorrow, piggybacked into
>an Oric, and *working*!
>
>The vision is there ....

The schematic now is probably one step away from a TTL based design. Unfortunately, some of the chips described here have no direct TTL counterpart - eg 24 output ripple count, 13 bit adder ... so these would have to be constructed from multiple chips.

However, I've been looking tentatively at some IC datasheets, and have found some very useful looking chips which are programmable logic arrays. These allow you to download a bit pattern specifying routing between logic blocks, and may be the way to go for re-building (and then, improving) the ULA. It would certainly be better for design modification than TTL. However, the programmer and software for these chips may not be cheap - I shall find out more .....

This document written by M.J. Brown, May-Jun 1996. It is placed in the public domain - however you must cite the title, author and contact points as given at the head of this document when quoting, modifying, or distributing this document and figures. This paragraph must remain intact. Any incomplete or modified distribution must be marked as such.

Well, that's it so far. The aim of doing all this is to try and second guess the design with a view to improving it. There are many ideas rattling around for improvements, such as 80 column text/higher resolution graphics, parallel attributes, better colour support (e.g. 16 fgnd, 16 bgnd colours from palette of 256). All this needs to be somewhat backward compatible to our beloved Oric and Atmosses ....

Final Plea: If anyone out there has circuits or descriptions of the Microtan 65, I'd be interested in seeing it. If you do, please contact me by Email : (mjb@pootle.demon.co.uk) or by post (2 Glentworth Avenue, Coventry, CV6 2HW).

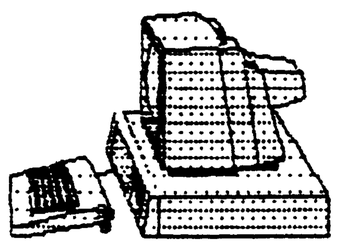
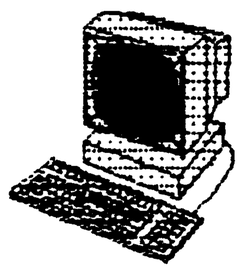
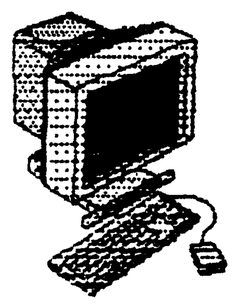
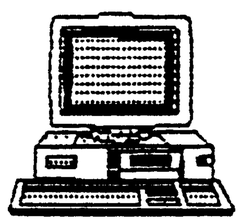

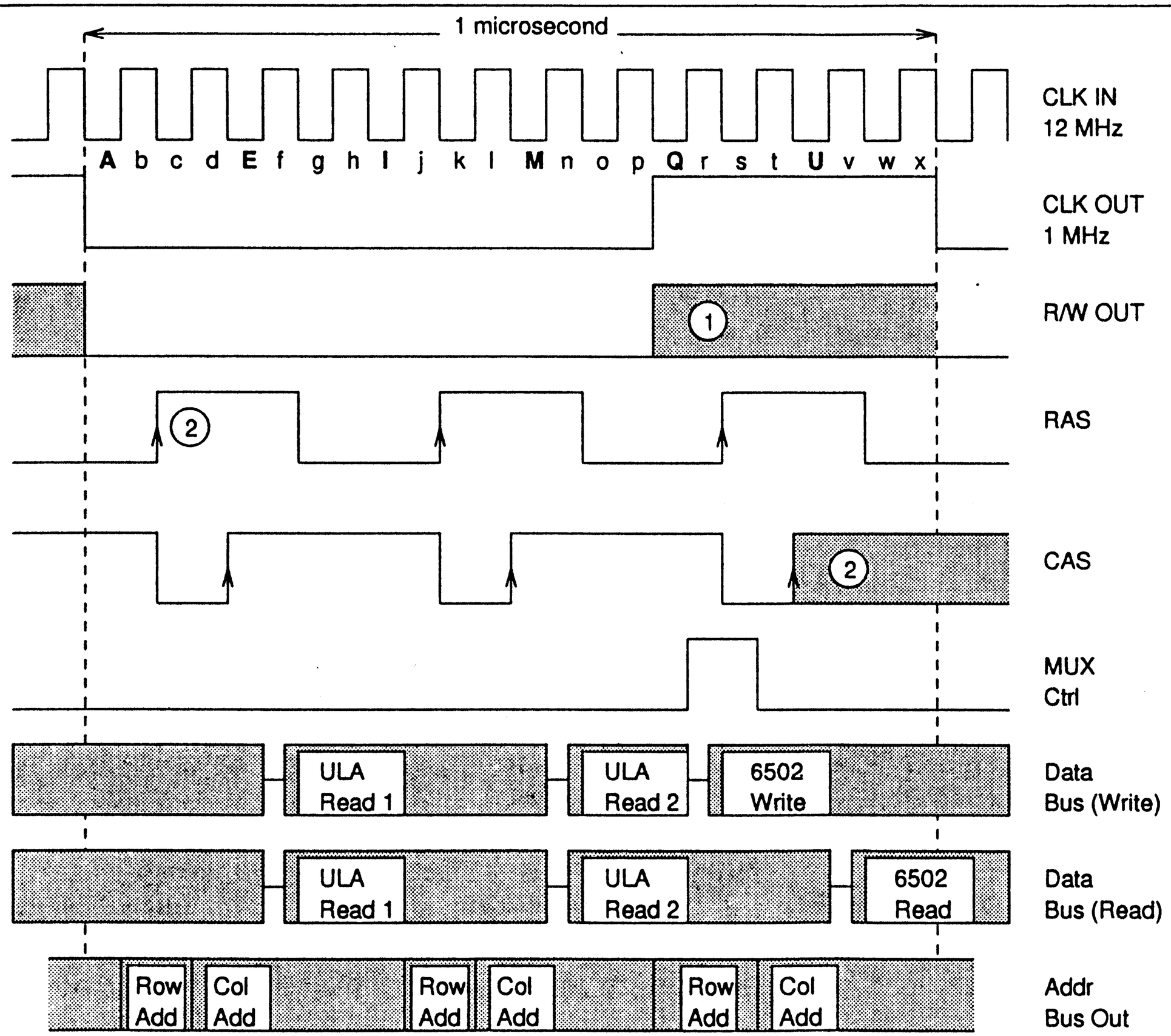

This drawing placed in the public domain. Any changes must be marked as such, and original document, author and distribution details quoted.

Key:-

All levels TTL,

denotes variant level

A,E,I,M,Q,U - denote dot clocked out at this time, where Q is first bit

Note 1: R/W out 0=Read 1=Write, follows logical NOT of R/W in during 1MHz clock high

Note 2: RAS/CAS active on rising edge. CAS might not be asserted during 6502 access, e.g read/write peripheral or read ROM.

External Signals Timing Diagram - Memory and Bus See attached notes for explanation.	Title Oric ULA	Date	28/05/96	V1.02
		Drawn	Mjb/Xfig	Sh1/7

3.0

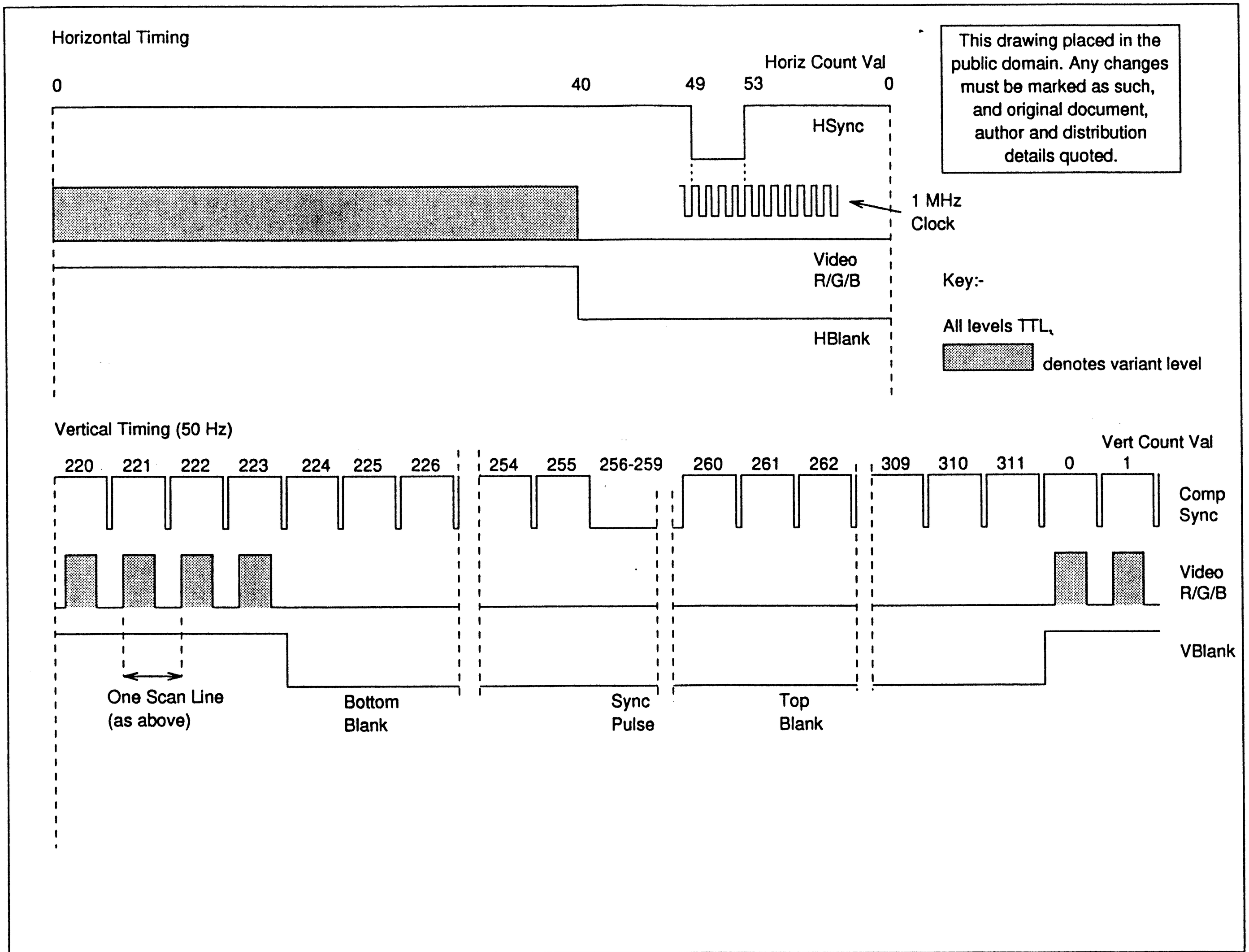

This drawing placed in the public domain. Any changes must be marked as such, and original document, author and distribution details quoted.

External Signals Timing Diagram - Video See attached notes for explanation.	Title Oric ULA	Date	28/05/96	V1.02
		Drawn	Mjb/Xfig	Sh2/7

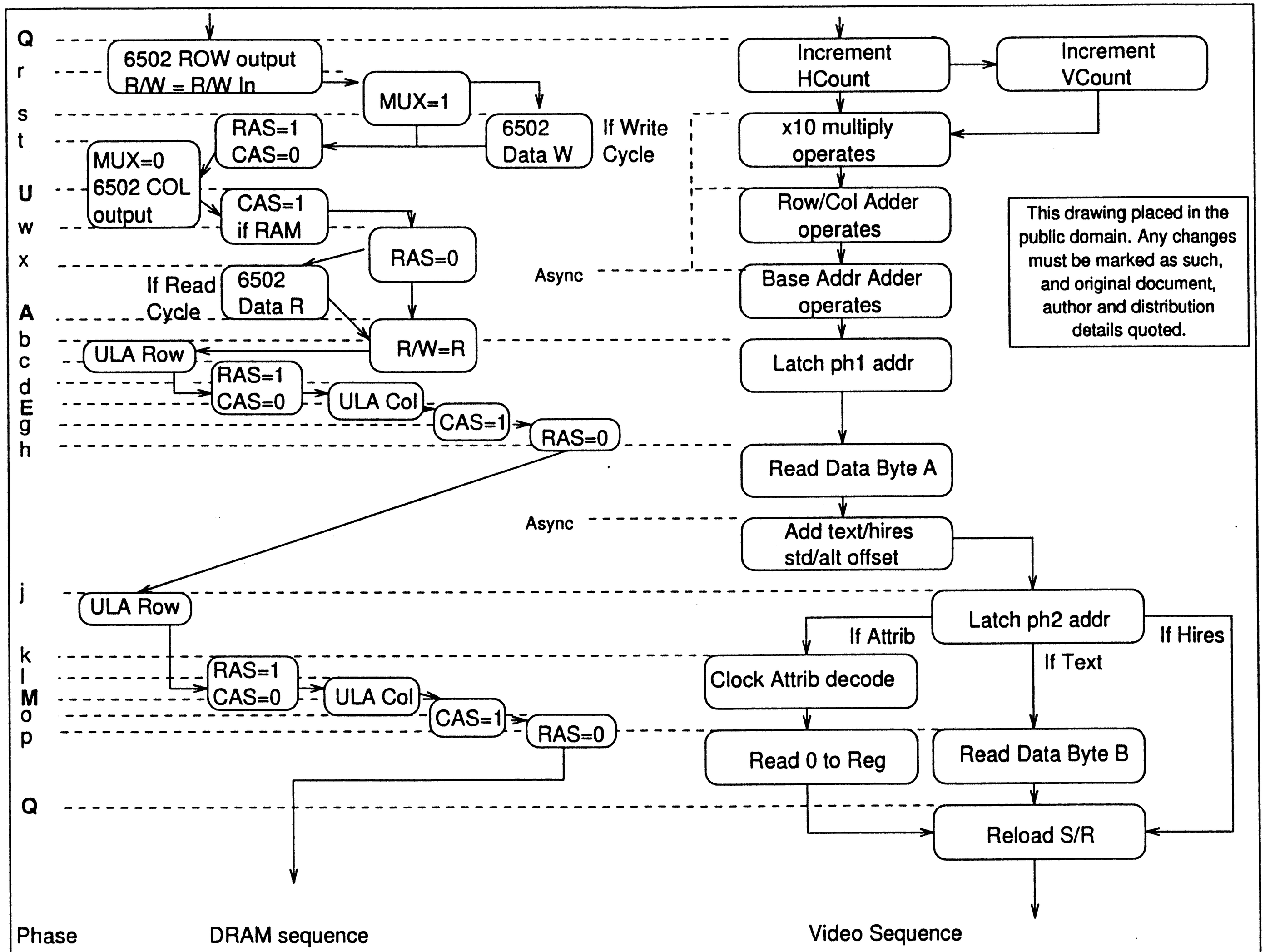

This drawing placed in the public domain. Any changes must be marked as such, and original document, author and distribution details quoted.

Control and Sequencing flowchart See attached notes for explanation.	Title Oric ULA	Date	29/05/96	V1.02
		Drawn	Mjb/Xfig	Sh3/7

32

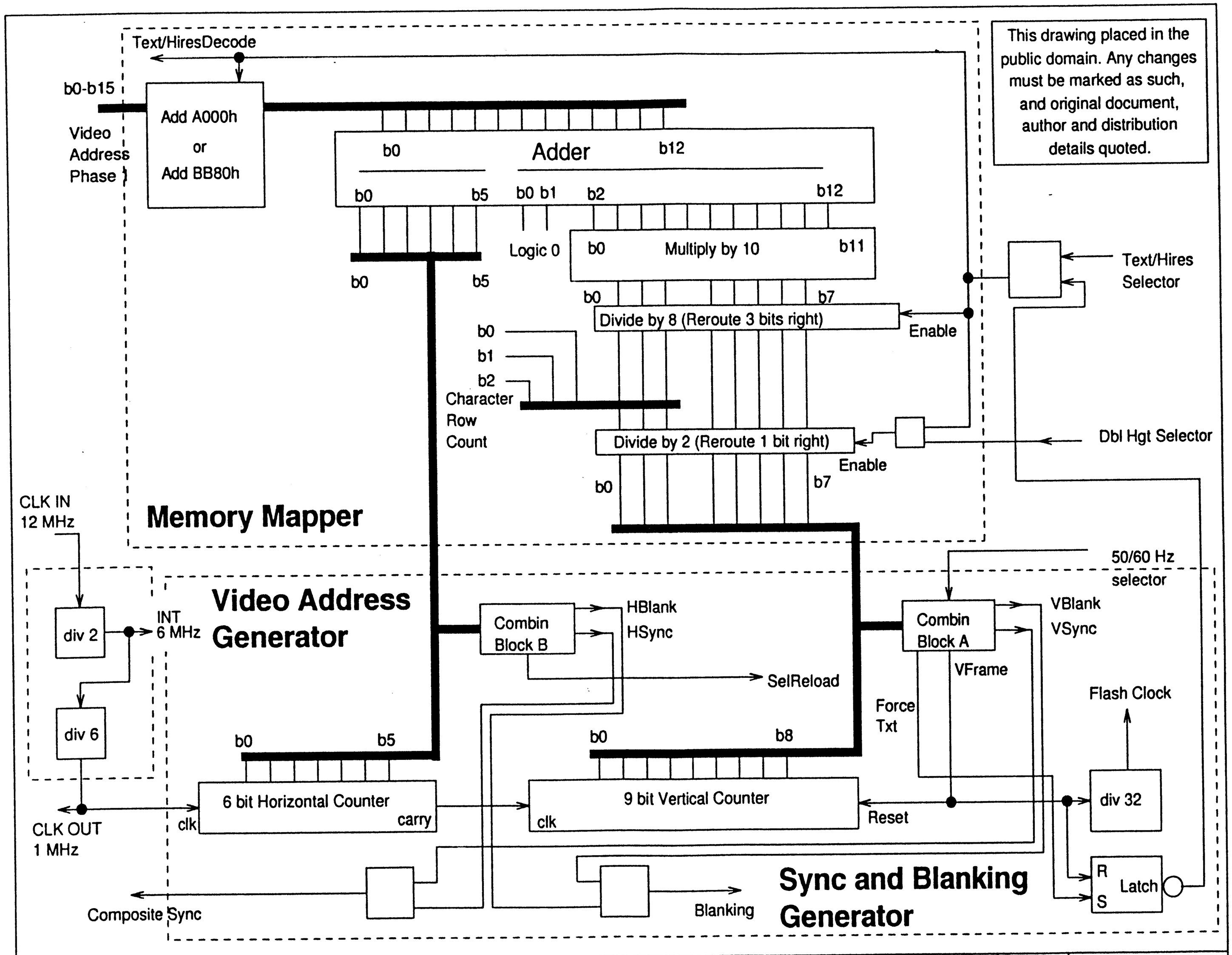

This drawing placed in the public domain. Any changes must be marked as such, and original document, author and distribution details quoted.

Video Address Generation, Video Blank/Sync Generation, Memory Mapper
See attached notes for explanation.

Title	Oric ULA	Date	29/05/96	V1.02
		Drawn	Mjb/Xfig	Sh4/7

33

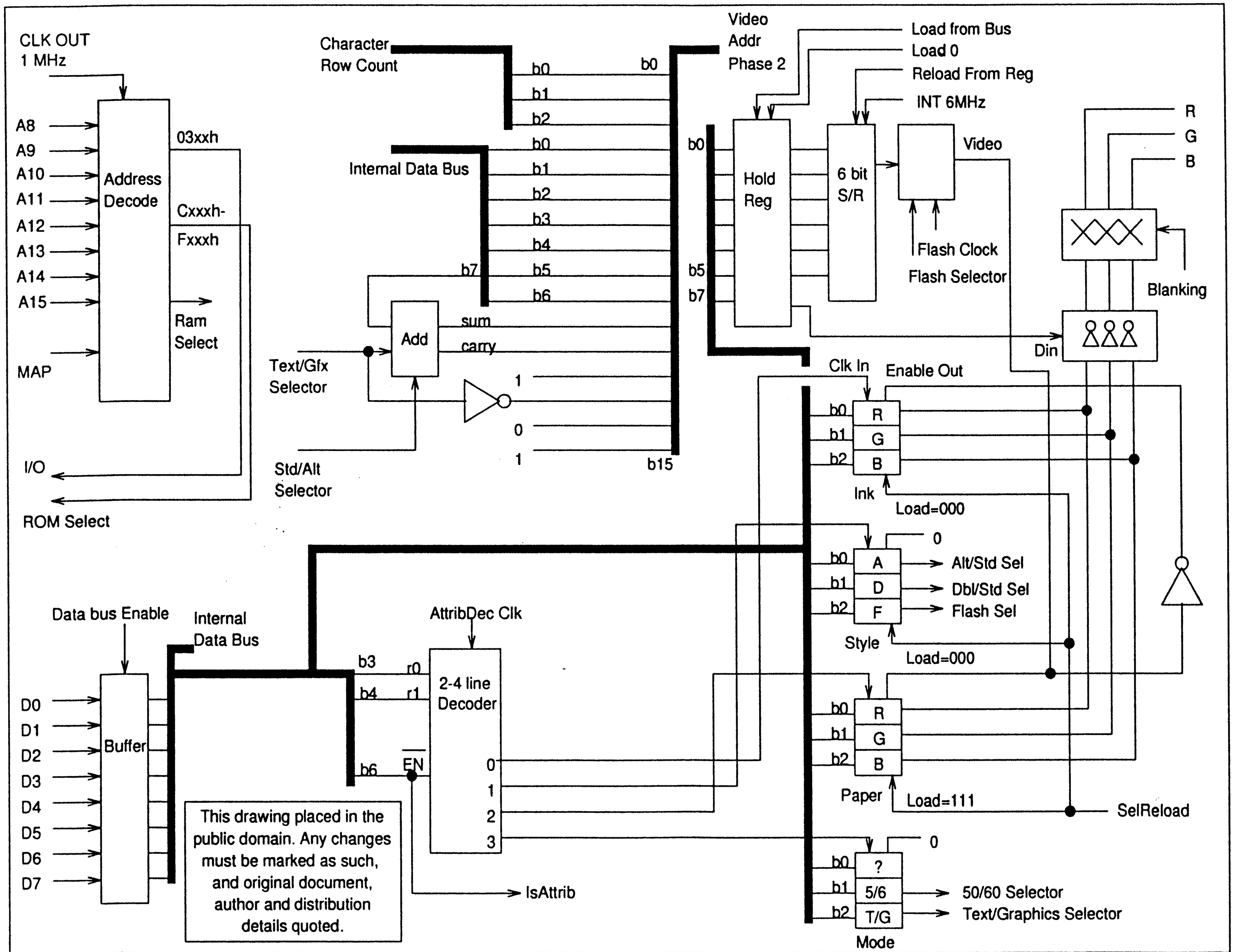

I/O Decode, Video Generation, Character Definition Lookup
See attached notes for explanation.

Title	Oric ULA	Date	29/05/96	V1.02
		Drawn	Mjb/Xfig	Sh5/7

34

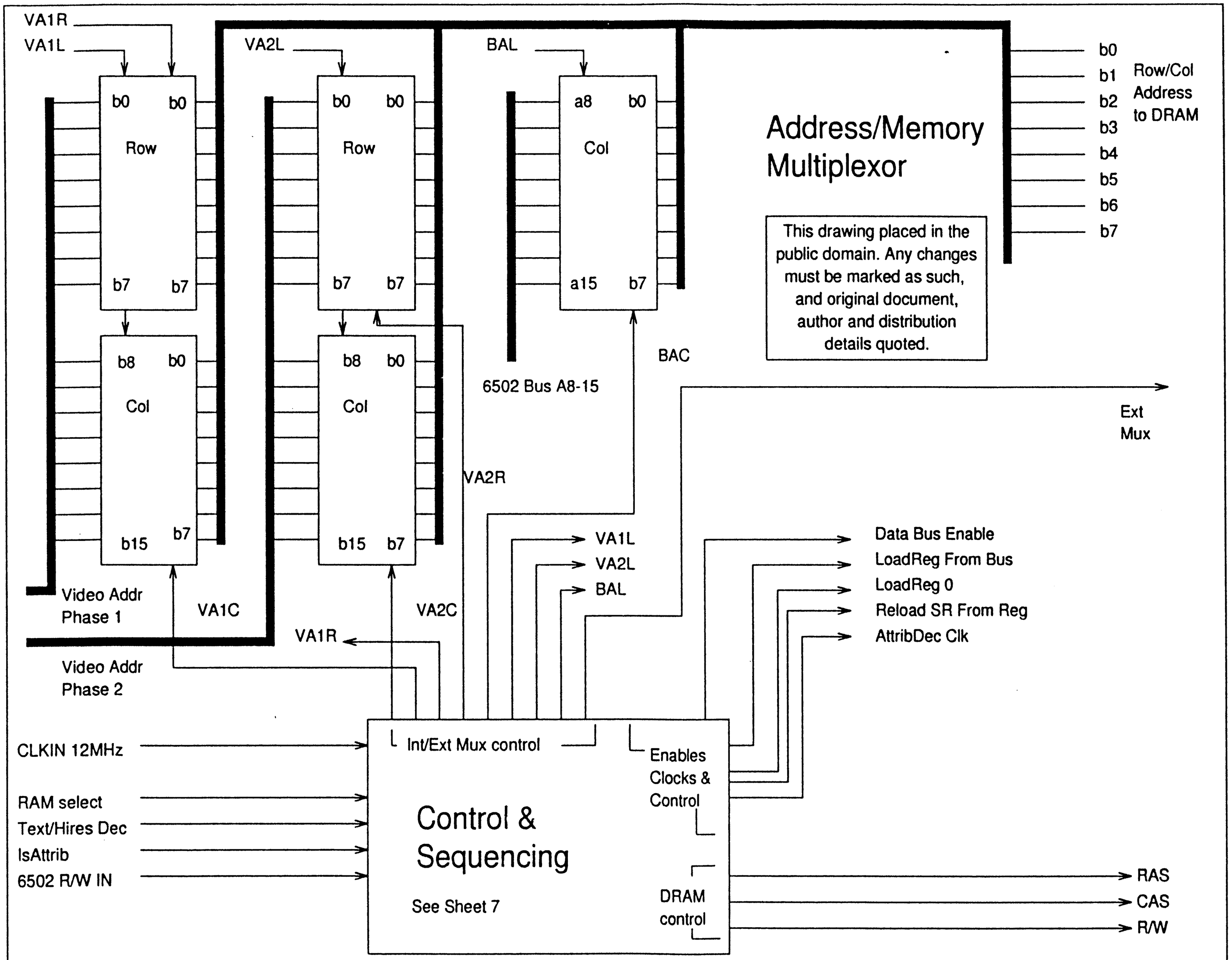

Memory Multiplex, Control and Sequencing
See attached notes for explanation.

Title	Oric ULA	Date	29/05/96	V1.02
		Drawn	Mib/Xfig	Sh6/7

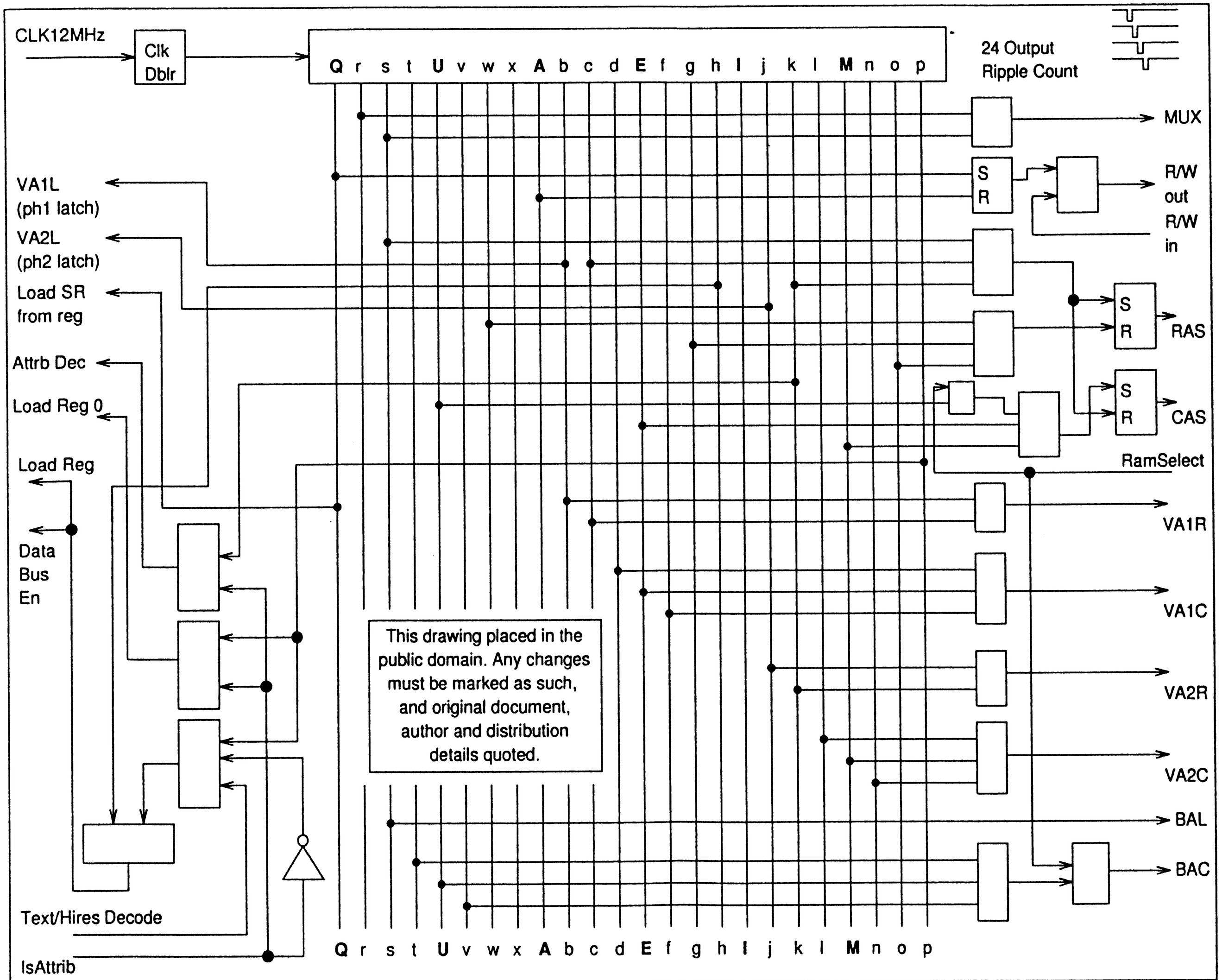

Control and Sequencing Logic Block See attached notes for explanation.	Title Oric ULA	Date	30/05/96	V1.02
		Drawn	Mjb/Xfig	Sh7/7

BRIAN'S PAGE - OUM AUG / SEPT 1996

BRIAN KIDD , 32 KIER HARDIE CRESCENT , NEWPORT , SOUTH WALES . NP9 9DQ

WELCOME BACK , HOPE YOU HAVE HAD AN ENJOYABLE SUMMER .

STARTING FROM THIS ISSUE , I WILL BE TRYING OUT VARIOUS PAGE LAYOUTS , AND HOPE TO IMPROVE ON PAST EFFORTS . COMMENTS WOULD BE WELCOMED . FURTHERMORE , GRAPHICS WILL START TO BE USED , ESPECIALLY IN CONJUNCTION WITH THE POSERS , TALKING OF WHICH , SOME THAT I SET , CAN BE SOLVED , USING BASIC AND AN ORIC - I HOPE YOU DO IT BY THIS METHOD !

IT WAS WITH GREAT SADNESS THAT I READ IN THE LAST ISSUE THAT I HAD WON ANOTHER OF DAVE'S COMPETITIONS , NOT THE FACT THAT I HAD WON , BUT THAT I WAS THE ONLY ENTRANT . DAVE HAD EVEN GIVEN YOU ALL SOME EXTRA TIME TO ENTER . NO WONDER DAVE HAS GIVEN UP ON COMPETITIONS .

IT'S A GOOD JOB THAT OUM SUBSCRIPTIONS AREN'T LIKE COMPETITION REPLIES , ELSE
WE WOULD HAVE NO MAGAZINE NOW .

NEVER-THE-LESS , I WILL CONTINUE WITH THE ODD PRIZE PUZZLE - THERE'S ONE FOR YOU TO ENTER THIS MONTH , SO PLEASE ENTER - OH BY THE WAY , MY THANKS GO OUT TO ALL THAT HAVE WRITTEN TO ME OF LATE - I WILL REPLY SHORTLY .

LAST ISSUES ANSWERS ARE AS FOLLOWS :

1) EIGHT PEOPLE , EIGHT ORANGES AND A BOX

QUITE EASY REALLY , JUST A LITTLE LOGIC SHOULD HAVE TOLD YOU THAT SEVEN PEOPLE HAD AN ORANGE EACH , WHILE THE EIGHTH PERSON WAS GIVEN THE BOX , WHICH CONTAINED AN ORANGE .

2) THE NUMBER SEQUENCE

61 - THE NUMBERS GIVEN ARE THE SQUARES OF THE NUMBERS , STARTING FROM 9 , AND GOING IN DESCENDING ORDER , ONLY THEY WERE WRITTEN BACKWARDS .

3) SNAIL AND POLE

HE REACHES THE TOP ON THE 18th . (IF YOU READ THE QUESTION CORRECTLY , YOU WOULD SEE THAT THE SNAIL WOULD TRAVEL 1 FOOT PER WHOLE DAY - THEREFORE 17 Ft IN 17 DAYS , ON THE 18th DAY HE CLIMBED THE LAST 3 Ft TO REACH THE TOP)

4) NINE LETTERS AND NINE WORDS !

STARTLING , STARTING , STARING , STRING , STING , SING , SIN , IN ,I

5) CIGARETTE SMOKING TRAMP

BELIEVE IT OR NOT , HE CAN SMOKE A TOTAL OF 15 CIGARETTES - (SMOKES 10 - LEAVING TEN BUTTS : HE STORES 1 AND FROM THE REMAINING NINE HE MAKES 3 : SMOKES THESE , LEAVING 3 BUTTS , FROM WHICH ANOTHER CIG IS MADE . ONCE SMOKED , HE HAS 2 BUTTS LEFT . ALONG COMES HIS MATE , WHO LOANS HIM A BUTT , WHICH HE ADDS TO HIS TWO TO MAKE ANOTHER CIGGY , WHICH HE DULY SMOKES . HE THEN RETURNS THE BUTT OF THIS TO HIS MATE !)

BRIAN'S PAGE - *CONTINUED.....*

NOW FOR THIS EDITIONS BUMPER SELECTION OF POSERS , STARTING WITH A MYSTERY PRIZE PUZZLE . ANY CORRECT ENTRIES SENT TO ME WILL BE PUT INTO THE PROVERBIAL HAT , FOR THE CHANCE TO WIN , AN AS YET UNKNOWN PRESSIE !

Q1) COMPLETE THE FOLLOWING MATRIX , OBEYING THE FOLLOWING RULES :

A) ONE OF EACH NUMBER (1 - 9) SHOULD APPEAR , ONLY ONCE , IN THE NINE VERTICAL AND HORIZONTAL COLUMNS .
B) EACH OF THE NUMBERS (1-9) SHOULD ALSO APPEAR IN EACH OF THE SMALLER 3 * 3 MATRIX'S.

CAN YOU DO IT ?

7		5	6		2	1		9
3	2			5			6	4
9		4				5		7
2						7		5
				9				
6		7		1		3		2
8		3				4		6
4	9						5	3
1		2	4		6	9		8

Q2) WHAT COMES NEXT IN THIS SERIES : A , E , F , H , I , K , L , M , N , ?

Q3) IT'S NUMBER CROSSWORD TIME - COMPLETE THIS GRID WITH THE GIVEN CLUES :

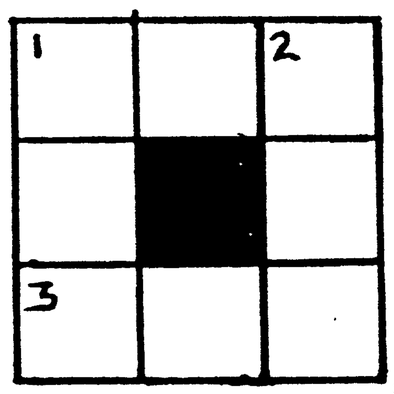

ACROSS : 1) '1' DOWN - 15 (& A MULTIPLE OF 17) : 3) A BEASTLY NUMBER
DOWN : 1) A SQUARE : 2) A SQUARE + 2

Q4) CAN YOU ARRANGE THE DIGITS 1-9 INCLUSIVE IN A 3*3 GRID SO THAT ALL ROWS , COLUMNS AND DIAGONALS ADD UP TO THE SAME TOTAL ?

Q5) HOW FAR CAN A RABBIT RUN INTO A WOOD ?

WELL THAT'S ALL FOR THIS ISSUE - SEE YOU NEXT TIME .

Son of PET: CBM C64 & 128

Actually, the 'C64' I use for about 45% of my computering is an SX64, which is the 'Executive' model with built in 5" colour tube and 1541 drive. This sits by my armchair and has a flex attached keyboard so one can sit back to type. The TV setup in the same room uses a CV monitor, so this also gets used (Oric or CBM), for greater eye comfort.
Another 45% of computer time, I spend on a C128 (C64/128, as it's switchable. Mine's actually a 128D, with built in 1571FDD) which, according to ICPUG, is the highest state of development to be found among 8-bitters. It lives in another room (or 'Shack'), and is connected through an interface unit (buffer and fonts) to a Panasonic 24 pin printer.

Yes, ICPUG is still very much extant and publishes a regular bi-monthly c.120 page 'Newsletter'. It invariably contains some articles on the older machines together with a good deal on Amiga and MeSsyDos machines and Windoze. A free, and pretty vast, library is available for most (all?) CBM machines. There is much excellent technical content in the mag: games are utterly beyond mention.
Jack Cohen is no longer the Membership Secretary. The latest I have to hand (June 1996) gives:

Tim Arnot, 17 Colne Drive, Oakfields,
Didcot, Oxfordshire. OX11 7RZ
Telephone: 01235 815725 (after 8.30 pm).

As you see, that's 90% of my computing time on these stone-age devices. However, my other machine is an Atmos! Bought of a 'siop' in Caernarfon in 1985, for £70. My first computer and a very good buy at the time: wife (Anne) says it was the only thing that could have kept me quiet for so long (to rest housemove-hammered heart problem). Only 10%, but an essential 10%. It sits, connected to a printer, and waiting patiently, like Marvin, ready to boot Author (as now), run a program or do a calculation. I bought it because 'Which' said it had better Basic than the 64 and more memory than the BBC, which seemed to be the main alternatives. It also runs nicely, if a wee bit extravagantly, on batteries (20m on 'D' rechargeables, hours on Yuasa 10AH). I'm slowly fixing a luggable laptop out of one: anyone got ideas on how to make its memory survive on less juice? The C64 is more awkward to run on batteries as it requires 5vDC(reg) and 9vAC.
Another great advantage of the Oric, is that it uses proper ASCII as opposed to the 'PetSCII' of the 64. The 64, therefore, requires an interface unit, or translation program, to drive a non CBM printer. The Atmos is therefore very handy for problem solving.

Although the C64 has only been sold as a games machine here, for some time, there has been, and is, a wealth of useful soft and hardware available for it and the C128. Some is still available new in UK and there are vast riches to be had in USA, generally cheaper even with carriage and VAT added on. (Hardware too, but watch out for mains-supply differences). Its grotty Basic can be rendered splendidly redundant, if one can get a 'COMAL' cartridge. Comal, also available in a reduced form, on disk, is a Basic like language, semi-compiled, using procedures and labels and developed in Scandinavia for educational purposes to encourage structural programming. The cartridge adds ROM and RAM and quite transforms the handling of a C64. Other Basics, compilers and other languages are available.

For word processing, I believe it is difficult to beat 'The Write Stuff' by Busy Bee Software on ANY machine, for straightforward typing handiness, and considerably more than basic facilities. I mention this first, because WP is, to me, the bread-and-butter of computing. Among the features, perhaps less expected on an 8-bit, are: macrotyping (type any one or two letters + a space, and get a word, phrase, boilerplate or your address - your choice - no hold up: it just happens as you type), automatic paragraph numbering (Arabic or Roman) and indentation, 80 column 'preview' display (full width without scrolling. The C128 is switchable 40/80 col. anyway), a variety of macro systems for special characters ASCII sets etc. Most other WP text files can be accepted or produced and, with the right drives, transferred to MS-DOS as ASCII. Full disk and printer control is available within the program and all the newer hardware to be mentioned below, is supported. There is a calculating facility and sorting is available on up to ten columns of text. It also works in with various graphics programs to incorporate illustrations into text, has a speech readout (not quite as good as Stephen Hawking) in a special 'blind' version which can also read out keys and menus. TWS does not, as yet (!) provide for proportional spacing AND justification at the same time nor are fonts like 'Truetype' available (yet!). For those addicted to the MCP-40, there is a similar (1520) plotter for the CBM serial interface.

Other software for the C64 or 128, include the 'GEOS' graphics program, which is a "Windows' like GUI-WIMP environment for WP, fonts (hundreds. Also arrangements for substituting higher grades of bitmapped fonts than are possible in a screenful of text), graphs, charts and spreadsheets. There are also independent WP, database spreadsheet and graphics programs of course, on which some well known names of today, cut their teeth as designers. Loads of utilities and, for the 128, CP/M, handled by a Z80 'co-processor' and compatible with that on other computers.
(A rudimentary version of CP/M was providied for the C64 - not much use.)

Hardware for 64/128 as well as the usual modems and interfaces, includes a variety of disk drives permitting formatting of CP/M or MS-DOS disks (eg. I have, FDD:'1571' 5.25" 360k, FDD:'1581' 3.5 720k.) and reading/writing of text files. (Geo)Fax, (Handy)scanner, digitiser and MIDI systems are all supported.
I actually bought my first C64, simply because I could get a Teletext adaptor for it - and not for the Oric. Sadly, like the Comal cartridge, no longer produced. I understand that the 128RGBI output can (with 'I Paint') produce the same quality interlaced screen as the Amiga, with more colors (B-Bug Newsletter).

The main firm supporting 8-bit CBM, is 'CMD' in USA. From them (1966 Catalogue) can be obtained RAM expansion, internal and external - up to 2M or 16MB with extra PSU. External RAM can be battery-backed (eg: 'RAMLink') and 'The Big Brown Box', with SRAM and internal battery holds text *as you type*, independently of the computer. Hard drives, up to 4.4GB (and other drives), work faster with RAMlink: 'JiffyDOS', on chip, will modernise and speed older drives. I understand that scanners (OCR?) and speed-ups (speeds-up?) up to 20MHz are possible.

The great thing about the 8-bits, to my mind - apart from avoiding excessive complexity - is the cheapness, unless you keep up with the very latest. Even then, one benefits from the attitudes of suppliers (and others!!) who are revulsed by the high pressure selling of 'fashion-upgrading'. It takes just as long, after all, to type on an 8-bit (with a good WP) as it does with a Pentium-Inside. BB-TWS cost me £10 for the first (C64) version and £5 or £10 for each of the subsequent versions. The designer and 'B-Bug' magazine are continually helpful with further development and sorting out problems.

A disadvantage, of course, is that when commercial programmers move on, they may be lost to us, 8-bit stragglers. I use 'Geos' for music graphics, which isn't bad, but not as good as OUM 'Muso' manages. Wonder what he does his staff notation with? Geos was developed when most printers were 8 or 9 pin (or laser). On my 24-pin, the results are a bit dotty, but I'm working on it and they say better drivers are to be had. 'FGM' is a compatible graphics program which should help me to print bigger originals, to reduce in photo-copying. The 'sprite' capabilities

the 64/128 allow graphic objects (notes etc) to be positioned by mouse: 'GeoStamp' and 'FGM' are examples of recent software which arrived just in time sto stop/delay my going 'IBM'.

The beez-neez of music graphics, I understand, is 'Sibelius-7', as advertised in the BBC Music mag. £1000 for the introductory version, £2000 for a proper job and £4000 for the professional. I enclose a more amateur sheet, from my Panasonic 24 pin DMP.

CONTACTS

Finally, towards answering the Question = where to get info = some addresses to add to the one above:-

(I say, isn't it nice having 2 computers side by side! The addresses are in the other one: sort of multi-tasking.
By the way, I DO like the key-click on the Atmos. TWS has one, but it's not as good.)

ICPUG: Membership, see above.

'Programming the Commodore 64' (Book = the 'Bible'!) from ICPUG: John Bickerstaff, 45 Brookscroft, Linton Glade, Croydon, Surrey. CR0 9NA.
(£9.99 -members price?- Cheques to ICPUG).]

Busy Bee Software, PO Box 2959, Lompoc, CA 93438. (805-736-8184)
Busy-Bee User Group, 3 Paseo Cuacha de Toro, Arivaca, AZ 85601-0003,
USA. (Bags of info on sources and - savour that address!)

CMD (Creative Micro Designs).
(Drives, interfaces, scanners, 'Jiffydos', Software, Geos, Mag, 'RamLink', Accelerator, HD)
Box 646, East Longmeadow MA 01028
(1-800-638-3263. FAX: 413-525-0147. Help: 413-525-0023)

'GEOS in Review' etc (publications) from: JMV Graphix, PO Box 635, Blair Athol 5084, South Australia.

FGM (Fun Graphics Machine), Ron C. Hackley, PO Box 1191 Roseburg, OR 97470.
(503-673-2234. Q-Link: RONH8)

DTBS, 7 Castle Lane, Todmorden, Yorks OL14 8AF (01706-812800). C64s, games, tapes & books. (Discounts for ICPUG members)
Electric Boys Entertainment Software, 917B Brighton Rd, Purley, Surrey. CR8 2BP (0181 668 7595.

Software Support International, Suite A-10 2700NE Andersen Rd, Vancouver WA 98661. (206-695-1179)

Media Value, 4251 Burton Dr, Santa Clara CA 95054 (800-845-3472. Fax: 408-727-3155)
(eg: Used HD disks $27 per 100.
New ED disks $1.99 each. These use CMD 'FD-4000' 3.2MB drives.

Seattle Lab, 214 1st St, Kirkland WA 98033. (206-828-9001. Fax: 206-828-9011)
C64s and emulator for 'clones'. (There's also an emulator on Internet, I hear.)

'Micro Computer Mart' is good for s/h items and ads for shareware and even the odd SIG.

The above list is mainly from ICPUG and B-Bug and could be much extended. Entry is not a recommendation.

By the way, C64s (not 128s as far as I know) have a bit of a reputation for overheating (Don't just buy one!) The 1541 FDD is the slowest in the world, but 1571 and 1581 especially on 128 are much faster. A half meg (or more) REU, for DMA and RAMdrive, speeds things up no end, and makes graphics handling a lot easier.

PS: If anyone has questions or is stuck for converting CBM ASCII files (no embedded codes) to/from MS-Dos or CP/M, I'll do my best.

Ron Key.

COMPUTER:	C64	C128	C64 20MHz	C128 20MHz
CPU:	6510 (=6502)	8502 (=6502)	W65C816S (Ext.CPLD)	(By Mar96)
CP/M:	(Z80)	Z80	(C128 runs CP/M3+. 1571 &)	
SPEED:	1MHz	2MHz (or 1)	20 MHz (or less)	20 MHz (or less)
KEYBOARD:	66key	92key	(Both CPUs compat.6502)	
DISPLAY:	TV	TV	TV	TV
(Sound & colour)	CV	CV RGBI	(64 Mode of C128 can use C128 keyboard & display if progamned)	
COLUMNS:	40	40/80		

DISK DRIVE TABLE
==========(All for CBM C64, C128 and enhancements)

DRIVE:	1541	1571	1581	FD2000	FD4000	RAMLink	HD
FDD Size:	5 1/4	5 1/4	3 1/2	3 1/2	3 1/2	RAMCard	SCSI
xS xD:	SSSD/DD	DSDD	DSDD	DDD/HD	DSED	1M,4M to	40M to
CAPACITY c:	170k	340k	800k	1.6M	3.2M	16M SIMM	4.4MB
CPM,MSDOS:	N	Y	Y	Y	Y	(Y)	(Y)
Back Compat:	-	Y	(Filecopy)	Y	Y	(by partitions)	
PARTITIONS:	N	N	Y	Y (Partits emulate 1541/71)			(+1581)
SPEED C64:	96/33	84/13	62/9	40/15	40/15	8 (sec)	37/7

(To write 125 block seq. file with/without 'JiffyDOS' or HD// conn.)

Ar Fore Dydd Nadolig

On morning day of Christmas

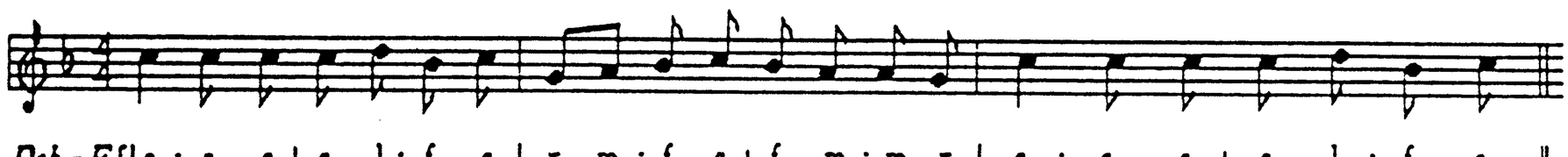

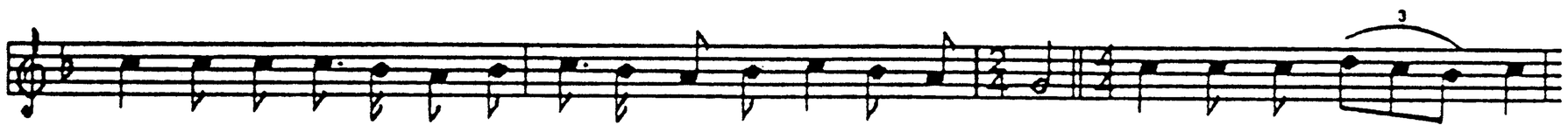

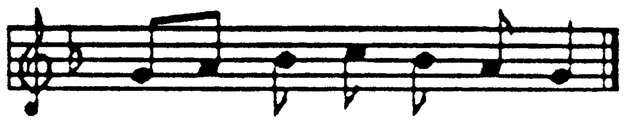

s a carol for *Plygain* r *Pylgain* from Latin *pulli cantus* = cock crow = raditionally sung in les at or before wn on Christmas Day to be followed by merrymaking and feasting

MESSAGES & COMMENTS

MESSAGE TO DR. RAY FROM COLIN COOK

IT IS SHAMEFUL TO ADMIT, BUT I HAVE ACTUALLY NOTICED A COUPLE OF THINGS ON A PC WHICH COULD USEFULLY BE EMPLOYED IN THE ORIC. IN THE WINDOWS-PACKAGED "WRITE" WORDPROCESSOR, THE CURRENT FILENAME APPEARS AT THE TOP OF THE SCREEN. IT APPEARS AFTER LOADING A FILE, AND ALSO AFTER SAVING A FILE UNDER A DIFFERENT FILENAME. THIS IS QUITE USEFUL WHEN YOU HAVE SET UP A LETTERHEAD, CONTAINING YOUR OWN ADDRESS AND THE CORRECT SPACINGS AND MARGINS,ETC.,BECAUSE IT CAN BE SAVED UNDER AN EASILY REMEMBERED NAME (SUCH AS 'TEMPLATE.WRI'). THIS CAN THEN BE LOADED EACH TIME A LETTER IS WRITTEN, AND THE REST OF THE LETTER CONTINUED FROM THERE. THE PROBLEM WITH 'WORDSPEED' (OTHERWISE STILL AN EXCELLENT UTILITY) IS THAT THE CURRENT FILENAME IS ALWAYS THE ONE LOADED FROM DISC: SAVING UNDER A DIFFERENT NAME DOES NOT ALTER IT. SO IF YOU'VE FORGOTTEN THE NEW NAME, YOU HAVE TO GO INTO THE SECOND MENU TO FIND OUT WHAT IT WAS. IT WOULD BE SO MUCH MORE CONVENIENT IF THE CURRENT FILENAME WERE UPDATED AND DISPLAYED AT THE TOP OF THE SCREEN, IN THE STATUS LINE. OF COURSE, THIS WOULD MEAN CHANGING THE PROGRAM, SO THAT YOU COULD DO A WORD COUNT, CHECK THE FREE MEMORY FROM TIME TO TIME, AND RE-DISPLAY THE FILENAME; ALL OF WHICH WOULD HAVE TO USE THE STATUS LINE. DIFFICULT? WORTHWHILE?

THE OTHER POINT CONCERNS SEDORIC, AND NOW I AM REALLY SHOWING OFF MY AMAZING TALENT FOR TIMING (THE BAD VARIETY). ONE USEFUL FEATURE OF THE PC KEYBOARD IS THAT WHEN CAPS LOCK IS ON, PRESSING 'SHIFT' ACTUALLY TAKES YOU INTO LOWER CASE! WHAT A BRILLIANT FEATURE THIS COULD BE FOR THE ORIC, BECAUSE ALL OUR PROGRAMMING HAS TO BE DONE IN UPPER CASE, WHICH MEANS WHENEVER WE WANT A LOWER CASE FIGURE, WE HAVE TO UNSET THE CAPS LOCK WITH CTRL-T, AND THEN REMEMBER TO SET IT AGAIN FOR 'BASIC' WORDS. DO WE REMEMBER? AND HAVING FORGOTTEN, THERE IS NO CONVENIENT CTRL-S TO CHANGE THE CASE, AS THERE IS IN 'WORDSPEED'. WE HAVE TO TYPE THE WHOLE LINE AGAIN. NOW, I KNOW VERSION 3 OF SEDORIC HAS JUST BEEN BORN, AND BEAUTIFULLY FORMED IT IS TOO, BUT COULD THERE BE A SIMPLE PATCH TO PRODUCE THIS EFFECT?

OR SHALL I WAIT (HOPEFULLY?) FOR THE HARD DISK TO COME INTO BEING.... I'M SAVING ALL MY PENNIES IN EXPECTATION. MY FLOPPIES ARE ALL DISORDERED AND NOT A PRETTY SIGHT (YOU CAN PRINT THAT, CAN'T YOU DAVE?)

THE NEEDS OF FRANK

THE NEW SLIMMER FRANK BOLTON HAS HIS IDEAS OF WHAT WOULD BE OF USE TO HIM IN THE ORIC WORLD, NAMELY, AN ORIC HARD DRIVE AND A SCANNER FOR THE ORIC - I LIKE THE SOUND OF THE LATTER.

CURRENT PROJECTS

THERE ARE A WHOLE HOST OF PROJECTS BEING WORKED ON AT PRESENT. THESE INCLUDE: HARD DISK INTERFACE (ALEXIOS CHOUCHOULAS), ATMOS HARDWARE/SOFTWARE UPGRADE (DR. RAY), SEDORIC 3 UPGRADE (ANDRE CHERAMY) and LIST OF ALL ORIC SOFTWARE (JEAN DAVID OLEKHNOVITCH).

IF YOU HAVE A PROJECT THAT YOU ARE WORKING ON THEN PLEASE LET US KNOW. IF A FEW ARE WORKING ON BASICALLY THE SAME IDEA, THEN IT MAKES SENSE TO POOL RESOURCES AND SHARE THE WORKLOAD.

IF YOU NEED MORE INFO. ON ANY OF THE LISTED PROJECTS, THEN JUST WRITE TO O.U.M, AND WE WILL INFORM YOU FURTHER OR PUT YOU IN CONTACT WITH WHOEVER IS WORKING ON THE PROJECT.

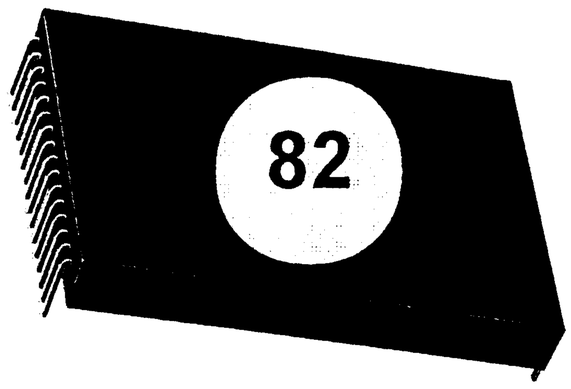

RAMBLING IN THE ROM

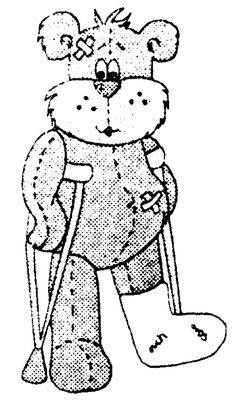

CEO Summer Disk

I hope those of you who are CEO members enjoyed the Summer disk. There was one program - Pentominoes - which has instructions still in French. You can refer back to Laurent's article in the June mag for a description of what it is all about, but here are the instructions in English:

> "The probelm set is to cover a given area by juxtaposing the 12 Pentominoes in the best manner. This program will provide possible answers to puzzle areas that you give it to solve. The solutions are displayed as they are found by the program. Press 'S' to stop the search, then ← to review previous solutions, → to review forwards, and 'C' to continue the search until the last one is displayed. Press 'Q' to quit.
> Set out the area to be solved on the screen using □ symbols and press 'Return' to start the search. When setting out the area use the cursor arrows to move around the screen, space to display a □ , 'DEL' to delete a □ . The program cannot solve a problem if it is incapable of resolution."

The Naked Oric - Part 2

Well, last time we reached half way in the ROM disassembly, and that means Part Two (#D000-#DFFF) is now available as a book. Part One (#C000-#CFFF) is still available, of course - price is £5.00 per volume, £9.00 for both together, post and packing included.

Rambling on into Part Three - still the maths...

Treat the decimal point

E02B	LDA #00	.....	.....	always the same masterly skill
E02D	BCC E031	.....	.....	
E02F	LDA #80	.....	.....	to echo C in
E031	LSR CE	.....	.....	
E033	ORA CE	.....	.....	bit 7 of #CE
E035	STA CE	.....	.....	which indicates decimal mode
.....	.....	E039	ROR CE	it's so simple this way...
E037	BIT CE	E03B	BIT CE	
E039	BVC DFEA	E03D	BVC E002	if the second decimal point, end
E03B	LDA CD	E03F	LDA CD	take exponent (base 10)
E03D	SEC	E041	SEC	
E03E	SBC CC	E042	SBC CC	less the number of digits after the decimal point

E040	STA CD	E044	STA CD	as exponent base 10
E042	BEQ E056	E046	BEQ E05A	if exponent is nul, OK
E044	BPL E04F	E048	BPL E053	if it is positive, adjust

Adjust the number for a negative exponent

E046	JSR $DDBF	E04A	JSR $DDC3	ACC1=ACC1/10
E049	INC CD	E04D	INC CD	increment the exponent
E04B	BNE E046	E04F	BNE E04A	and start again if not correct
E04D	BEQ E056	E051	BEQ E05A	complement if negative number and end

Adjust the number for a positive exponent

E04F	JSR $DDA3	E053	JSR $DDA7	ACC1=ACC1*10
E052	DEC CD	E056	DEC CD	decrement the exponent
E054	BNE E04F	E058	BNE E053	and start again if not correct
E056	LDA D6	E05A	LDA D6	take sign
E058	BMI E05B	E05C	BMI E05F	and jump if negative
E05A	RTS	E05E	RTS	otherwise exit
E05B	JMP $E26D	E05F	JMP $E271	apply the '-' operator

E05E	PHA	E062	PHA	save the digit (ASCII)
E05F	BIT CE	E063	BIT CE	test if decimal or integer
E061	BPL E065	E065	BPL E069	jump if integer
E063	INC CC	E067	INC CC	increment the decimal digit number
E065	JSR $DDA3	E069	JSR $DDA7	ACC1=ACC1*10
E068	PLA	E06C	PLA	recover digit (ASCII)
E069	SEC	E06D	SEC	
E06A	SBC #30	E06E	SBC #30	and restore to 0-9
E06C	JSR $E072	E070	JSR $E076	and adjust it to ACC1
E06F	JMP $DFEA	E073	JMP $E002	then continue with the next digit

ACC1+A --> ACC1

E072	PHA	E076	PHA	save the value to add to the stack
E073	JSR $DEDD	E077	JSR $DEE5	AACC1 --> ACC2
E076	PLA	E07A	PLA	recover value
E077	JSR $DF15	E07B	JSR $DF24	and convert it in ACC1
E07A	LDA DD	E07E	LDA DD	take sign ACC2
E07C	EOR D5	E080	EOR D5	and do an exclusive OR with that of ACC1
E07E	STA DE	E082	STA DE	save it in #DE
E080	LDX D0	E084	LDX D0	position Z if ACC1 is nul
E082	JMP $DA9A	EE086	JMP $DB25	ACC1=ACC1+ACC2

Determination of the exponent

Entry: TXTPTR points to the character of the exponent
Exit: #CD contains the new value

Remark: If the exponent is already greater than 10, i.e. it has three digits, and there is overflow if it is positive. If it is negative it can have any number of digits; the exponent will always be -100, i.e. the number is 0.

E085	LDA CD	E089	LDA CD	take current exponent
E087	CMP #0A	E08B	CMP #0A	
E089	BCC E094	E08D	BCC E098	and jump if less than 10
E08B	LDA #64	E08F	LDA #64	prepare for exponent=100
E08D	BIT CF	E091	BIT CF	take sign of exponent
E08F	BMI E0A2	E093	BMI E0A6	OK if negative

E091	JMP $DBE0	E095	JMP $DC39	'OVERFLOW ERROR' if not
E094	ASL A	E098	ASL A	*2
E095	ASL A	E099	ASL A	*4
E096	CLC	E09A	CLC	+former:
E097	ADC CD	E09B	ADC CD	*5
E099	ASL A	E09D	ASL A	*10
E09A	CLC	E09E	CLC	(it was the tens digit)
E09B	LDY #00	E09F	LDY #00	
E09D	ADC (E9),Y	E0A1	ADC (E9),Y	and add the tens digit of the exponent
E09F	SEC	E0A3	SEC	
E0A0	SBC #30	E0A4	SBC #30	readjust because of the ASCII code
E0A2	STA CD	E0A6	STA CD	and save the exponent anew
E0A4	JMP $E01A	E0A8	JMP $E028	and continue exponent

CONSTANTS FOR FLOATING/DECIMAL CONVERSION

E0A7	E0AB	BYT #9B,#3E,#BC,#1F,#FD	or 999 999.9
E0AC	E0B0	BYT #9E,#6E,#6B,#27,#FD	or 999 999 999
E0B1	E0B5	BYT #9E,#6E,#6B,#28,#00	or 1 000 000 000

DISPLAY 'IN' + LINE NUMBER

E0B6	LDA #B1	E0BA	LDA #AD	AY points to
E0B8	LDY #C3	E0BC	LDY #C3	the message 'IN'
E0BA	JSR $E0CE	E0BE	JSR $E0D2	and display it
E0BD	LDA A9	E0C1	LDA A9	take the number of
E0BF	LDX A8	E0C3	LDX A8	the current line in XA

DISPLAY AX AS UNSIGNED INTEGER

E0C1	STA D1	E0C5	STA D1	save high byte
E0C3	STX D2	E0C7	STX D2	and low byte
E0C5	LDX #90	E0C9	LDX #90	indicate exponent (base 2)=16
E0C7	SEC	E0CB	SEC	indicate positive (no complementing)
E0C8	JSR $DF22	E0CC	JSR $DF31	and convert to floating (or... #D8D5/DF40)
E0CB	JSR $E0D1	E0CF	JSR $E0D5	then in decimal
E0CE	JMP $CBED	E0D2	JMP $CCB0	and finally display the decimal string

CONVERT ACC1 TO DECIMAL

Entry: the number is in ACC1
Exit: Ay=address of the string (#0100), the number is converted into decimal at this address, ending with nul (#00). ACC1 is destroyed.

Principal: Quite complicated. The routine must determine whether it can use scientific notation or not, and if not , calculate the position of the decimal point, correctly justifying the number to print the maximum number of significant digits. It then does the conversion to base 10, described later.

Bug: V1.0: if the number is positive its sign is #02 instead of #20 (space).

E0D1	LDY #01	E0D5	LDY #01	point to the start of the decimal buffer

Place sign and test if number is 0

E0D3	LDA #02	E0D7	LDA #20	prepare A for + sign, bug in Oric 1
E0D5	BIT D5	E0D9	BIT D5	take sign in ACC1
E0D7	BPL E0DB	E0DB	BPL E0DF	if positive, OK

```
E0D9  LDA #'-'       E0DD  LDA #'-'       if negative, take '-'
E0DB  STA 00FF, Y    E0DF  STA 00FF, Y    and save sign in the buffer
E0DE  STA D5         E0E2  STA D5         and in sign ACC1
E0E0  STY E0         E0E4  STY E0         save the buffer pointer
E0E3  LDA #'0'       E0E6  LDA #'0'       prepare A iff number is 0
E0E5  LDX D0         E0E7  LDX D0         take exponent
E0E7  BNE E0EC       B0E8  BNE E0F0       jump if ACC1 (=) 0
E0E9  JMP $E1F4      E0ED  JMP $E1F8      if ACC1=0, put 0 and exit
```

Adjust ACC1 for maximum precision

```
E0EC  LLDA #00       E0F0  LDA #00
E0EE  CPX #80        E0F2  CPX #80        test exponent (base 2)
E0F0  BEQ E0F4       E0F4  BEQ E0F8       jump if the number is of the order of 1
E0F2  BCS E0FD       E0F6  BCS E101       jump if it is greater than 1
E0F4  LDA #B1        E0F8  LDA #B5        index 1 000 000 000 (1 E+10)
E0F6  LDY #E0        E0FA  LDY #E0        the largest exclusive value without exponent
E0F8  JSR $DCB7      E0FC  JSR $DCED      ACC1*(AY) --> ACC1
E0FB  LDA #F7        E0FF  LDA #F7        exponent base 10=-10 to compensate
E0FD  STA CC         E101  STA CC         multiplying by 1 E+10
E0FF  LDA #AC        E103  LDA #B0        index 999 999 999 (1E+10 -1)
E101  LDY #E0        E105  LDY #E0
E103  JSR $DF34      E107  JSR $DF4C      and compare to ACC1
E106  BEQ E126       E10A  BEQ E12A       if equal, maximum precision, jump
E108  BPL E11C       E10C  BPL E120       if greater, it must be divided
E10A  LDA #A7        E10E  LDA #AB        if smaller, frame it with
E10C  LDY #E0        E110  LDY #E0        the value 999 999.9 (1E+07 -1)
E10E  JSR $DF34      E112  JSR $DF4C
E111  BEQ E115       E115  BEQ E119       if equal, it must be multiplied
E113  BPL E123       E117  BPL E127       if ACC1 too big, more adjustment

E115  JSR $DDA3      E119  JSR $DDA7      ACC1=ACC1*10
E118  DEC CC         E11C  DEC CC         and compensate with power of 10
E11A  BNE E10A       E11E  BNE E10E       unconditional: continue adjustment

E11C  JSR $DDBF      E120  JSR $DDC3      ACC1=ACC1/10
E11F  INC CC         E123  INC CC         and compensate with power of 10
E121  BNE E0FF       E125  BNE E103       unconditional: continue adjustment
```

More next time, I trust everyone had a pleasant summer, the highlight of which of course was the Meet in Aylesbury - where does the time and the beer go...? It was good to see old faces and new friends, and a big thanks to Dave once again for his efforts in organising the day. My apologies to those who have had to chase me up for orders, I will be up to date within the next week or so... unless you know better! Please do drop me a line if you've got an outstanding order and haven't heard from me by the 16th September. Thereafter I hope my new super smooth logging system for orders will minimise any delays - I promise. I'm just in the prcess of reprinting 'The Story So Far' (£5.00) and the new Sedoric V3.0 manual (£4.50), so if you're missing either now is a good time to order.

Thanks again to Dave, see you next month.

Jon Haworth
3 Madingley Road
Cambridge
CB3 0EE

Email: jon@cam.dungeon.com
Oric Mailing List: oric@cam.dungeon.com

ORIC USER MONTHLY

THE BACK PAGE
Vol. No. 108/109
AUG/SEPT. 1996

We Finally Made It !!!

ESCORT no more!!

Those who have subscribed for a lengthy time will no doubt remember the front cover of an early OUM depicting my FORD CORTINA car in all its glory! Time moves on and so did my cars. The CHRYSLER and NISSAN CHERRY came and went. For well over 3 years our FORD ESCORT was the pride and joy. It died on August 31st. 1996 - after a night in Southampton Hospital, and a week of hobbling, the DICK family are now virtually back to normal. Luck was on our side! We welcome into our lives the new addition - a MONTEGA ESTATE.

CONTENTS

ESCORT no more!! 1
Late and Short!! 1
The Backlog 1
Home to Roost! 1
Credit Pays! 1
Club Europe Oric 1
EUPHORIC 1
Happy Birthday 1

Late and Short!!

Due to the above incident, the completion of this issue was somewhat delayed. Some of the features that I had wanted to include have been held over to next time.

The Backlog

Both myself and Jon Haworth have had difficulty lately in coping with Oric matters. We are making efforts to resolve this.
I shall be taking a week long holiday in October to try and resolve my backlog in Oric and other matters. Hopefully I'll find a couple of days to get to Blackpool to view the lights - Is it your round , David Hall?

Home to Roost!

Robert Cook has moved yet again. The address is one that will be remembered by those who subscribed during Roberts' reign as Editor. It is: 10 THOMPSON AVENUE, BIRMINGHAM.
Tel: 0121 6286156

Credit Pays!

Nearer the front of this magazine I reported that ICL Sorbus wanted to charge me £1.50 a minute for Hot-Line support. Some better news arrived recently. I had bought my PC on a part cash - part credit basis. The credit company has written to say that it has set up its' own FREE Hot-Line for ESCOM customers, and will honour all warranties.

Club Europe Oric

The CEO-MAG July/ Aug. Double issue duly arrived. The 30 page magazine is in my opinion the best that they have produced. Plenty of variety, and lots to interest all. I particularly enjoyed Jon Haworths' and Jean Boileaus' accounts of the ORIC MEET. Apparently Jean caught sight of John Peach and David Goodrum - rather amazing as neither was there! Jean was probably into his third bottle of HOOCH by then! Congratulations to the CEO on reaching their Diamond Jubilee, and we look forward to the next 75 issues.
With the magazine came the latest disc. This included an updated version of FLIGHT SIMULATOR - I will report on the changes in the next issue.

EUPHORIC

I had hoped to continue my EUPHORIC FOR DUMMIES series, but time has beaten me. Meanwhile I have updated to version 0.97c , which is much more user friendly.
Version 0.98 is currently being worked on - it will include digital sound.

Happy Birthday

Happy 9th. Birthday to ORIC USER MONTHLY. We will be back again in October. Please get your articles etc. in to the OUM office by September 27th. We will then gradually get back to an earlier publication date - i.e.: nearer the start of a month.